SUBDIVISION REGULATIONS

MAURY COUNTY, TENNESSEE

Original Adoption: 12/19/85
Adoption of Comprehensive Revisions: 4/6/09 (Effective 6/8/09)
Latest Revisions: Effective 5/2/16

MAURY COUNTY REGIONAL PLANNING COMMISSION
Columbia, Tennessee

Summary of Modifications to the Maury County Subdivision Regulations

Summary of Modifications	Effective Date
Add wording to include specific standards that requires the building envelope of proposed lots shall be located outside of the Floodway Fringe or 100-year Floodplain. Refer to Definitions and Article 4-102.1 Lot Arrangement	May 2, 2016
Modify the wording in the following places: (1) Article 3-103 Maintenance of Improvements (2) Article 2-105.7 CERTIFICATE OF OWNERSHIP AND DEDICATION	Feb. 1, 2016
Appendix "A"- Combine the Performance Agreement and Maintenance Agreement into a single agreement and deleting the existing separate agreements	Dec. 1, 2015
Modify the wording in the following places: (a) Article 2-101.2 Classification of Subdivisions (1) Administratively (Staff) Approved Subdivision (b) Article 3-106 Issuance of Building Permits and Certificates of Occupancy (c) Appendix A Section 3.3.9 (2) Shoulders. (d) Appendix A Section 6.3 Pipe Culverts and Storm Sewers.	Dec. 1, 2015
Modify the wording in all places in the Subdivision Regulations that refer to Vesting Periods to conform with the changes to Tennessee Code Annotated 13-3-413 that became effective on January 1, 2015. This includes the following places: (a) Article 2-102.4 Expiration of Approval (b) Article 2-103.6 Effective Period of Preliminary Approval (c) Article 2-104.2 Expiration of Approval (Construction Plans) (d) Article 2-105.5 Vested Rights (Final Subdivision Plat) (e) Appendix A -1.4 - Plan Review Procedure / Performance Agreements and Fees	Aug. 8, 2015
Section 6-102 Words and Terms Defined: Modifications to Definition of Flag Lot: Modifications related to access dimensions & requirements.	Nov. 9, 2014
Section 4-102 Lot Requirements: Additions and modifications related to lot design and irregular shaped lots. Section 6-102 Words and Terms Defined: Definition of Flag Lot: Additions and modifications related to lot design and irregular shaped lots.	August 06, 2012
Appendix 'A': Insert Article 1.7.1 Construction Surveying under Quality Control Testing & Construction Surveying. Change most references that read "County Road Superintendent" to read "the County". Renumber pages.	May 02, 2011

TABLE OF CONTENTS

ARTICLE I GENERAL PROVISIONS

1-101	Title	page 2
1-102	Authority	page 2
1-103	Jurisdiction	page 2
1-104	Policy and Purpose	page 2
1-105	Interpretation, Conflict and Severability	page 3
1-105.1	Interpretation	page 3
1-105.2	Conflict with Public and Private Provisions	page 3
1-105.3	Severability	page 3
1-106	Amendments	page 4
1-106.1	Enactment	page 4
1-106.2	Codification and Distribution	page 4
1-107	Procedures for Resubdivision	page 4
1-108	Conditions	page 4
1-109	Vacation of Plats	page 4
1-110	Variances	page 5
1-110.1	General	page 5
1-110.2	Procedures	page 5
1-110.3	Conditions	page 5
1-111	Enforcement, Violation and Penalties	page 6
1-111.1	General	page 6
1-111.2	Penalties for Violations	page 7
1-111.3	Civil Enforcements	page 7
1-112	Savings Provision	page 7

ARTICLE II PROCEDURES FOR PLAT APPROVAL

2-101	General Procedures	page 8
2-101.1	Plat Approval Requirements	page 8
2-101.2	Classification of Subdivision	page 8
2-101.3	Official Submission Date for Final Plats	page 9
2-102	Concept Plan	page 9
2-102.1	Application Procedure and Requirements	page 9

2-102.2	Purpose of Concept Plan	page 10
2-102.3	Concept Plan Requirements	page 10
2-102.4	Expiration of Approval	page 12
2-103	Preliminary Plat	page 12
2-103.1	Application Procedure and Requirements	page 12
2-103.2	Administrative Review	page 12
2-103.3	Notice of Hearing	page 13
2-103.4	Preliminary Approval	page 13
2-103.5	Public Improvements	page 13
2-103.6	Effective Period of Preliminary Approval	page 13
2-103.7	Zoning Regulations	page 14
2-103.8	Preliminary Plat Requirements	page 14
2-104	Construction Plans	page 18
2-105	Final Subdivision Plat	page 19
2-105.1	Application Procedure and Requirements	page 19
2-105.2	Endorsement of Notations	page 20
2-105.3	Hearing and Decision on Final Plat	page 20
2-105.4	Guarantee in Lieu of Improvements	page 20
2-105.5	Vested Rights	page 21
2-105.6	Final Plat Requirements	page 21
2-105.7	Final Plat Certificates	page 24
2-106	Signing & Recording of Subdivision Plat	page 28
2-106.1	Signing of Plat	page 28
2-106.2	Recording of Plat	page 28
2-107	Miscellaneous Platting Situations	page 28
2-107.1	Converting Parcels to Building Sites	page 28
2-107.2	Combine Two or More Lots	page 29
2-107.3	Shifting Lot Lines	page 29
2-107.4	Dedication of Right-of-way, Public Use Lands, or Easements	-29

ARTICLE III ASSURANCE FOR COMPLETION AND MAINTENANCE IMPROVEMENT

3-101	Guarantee in Lieu of Improvement	page 30
3-101.1	Completion of Improvements	page 30
3-101.2	Surety Instrument	page 30
3-101.3	Temporary Improvements	page 30
3-101.4	Cost of Improvements	page 31
3-101.5	Governmental Units	page 31

3-101.6	Failure to Complete Improvements	page 31
3-101.7	Acceptance of Dedication Offers	page 31
3-102	Inspection of Improvements	page 31
3-102.1	General Procedure	page 31
3-102.2	Release of Reduction of Guarantee in Lieu of Improvements	page 32
3-103	Maintenance of Improvements	page 32
3-104	Deferral or Waiver of Required Improvements	page 32
3-105	Security Documents	page 33
3-105.1	Performance and Maintenance Securities and Agreements	
3-105.2	Security Documents	page 33
3-105.3	Letters of Credit	page 33
3-105.4	Cashiers Checks	page 34
3-106	Issuance of Building Permits and Certificate of Occupancy	page 34
3-107	Disposition of Liquidated Securities	page 34

ARTICLE IV REQUIREMENTS FOR IMPROVEMENTS, RESERVATIONS AND DESIGN

4-101	General Requirements	page 35
4-101.1	Conformance to Applicable Rules and Regulations	page 35
4-101.2	Self-Imposed Restrictions	page 35
4-101.3	Monuments	page 35
4-101.4	Character of the land	page 36
4-101.5	Subdivision Name	page 36
4-101.6	Road Name	page 37
4-102	Lot Requirements	page 37
4-102.1	Lot Arrangement	page 37
4-102.2	Lot Dimensions	page 38
4-102.3	Building Setback Lines	page 38
4-102.4	Double Frontage Lots and Access to Lots	page 39
4-102.5	Soil Preservation, Grading and Seeding	page 39
4-102.6	Debris and Waste	page 39
4-102.7	Fencing	page 39
4-102.8	Water Bodies and Watercourses	page 39
4-103	Roads	page 40
4-103.1	General Requirements	page 40
4-103.2	Design Standards	page 42

4-103.3	Right-of-Way Width Dedication on Ex. Public Ways	page 43
4-103.4	Public Road Surfacing and Improvements	page 44
4-104	Road Construction Specifications	page 44
4-105	Drainage and Storm Sewers	page 44
4-105.1	General Requirements	page 44
4-105.2	Nature of Stormwater Facilities	page 44
4-105.3	Dedication of Drainage Easements	page 45
4-106	Water Facilities	page 46
4-106.1	General Requirements	page 46
4-106.2	Water Service Criteria	page 47
4-106.3	Fire Protection	page 48
4-107	Sewage Facilities	page 48
4-107.1	General Requirements	page 48
4-107.2	Mandatory Connection to Public Sewer System	page 48
4-107.3	Individual Disposal System Requirements	page 48
4-107.4	Design Criteria for Sanitary Sewers	page 49
4-108	Pedestrian Ways	page 50
4-108.1	Sidewalks and Bicycle Paths	page 50
4-108.2	Pedestrian Accesses	page 50
4-109	Utility Easements	page 50
4-110	Public Uses	page 51
4-110.1	Plat to Provide for Public Uses	page 51
4-110.2	Referral to the Governmental Agency Concerned	page 51
4-110.3	Notice to Property Owner	page 51
4-110.4	Duration of Land Reservation	page 51
4-111	Preservation of Natural Features and Amenities	page 52
4-112	Non-Residential Subdivisions	page 52
4-112.1	General	page 52
4-112.2	Standards	page 52

ARTICLE V FLOOD PRONE AREAS

5-101	Policy on Flood-Prone Areas	page 53
5-102	Flood-Damage Protection	page 54
5-103	Floodplain Areas	page 55
5-104	Improvements in Floodable Areas	page 56

ARTICLE VI DEFINITIONS

6-101 Usage page 57
6-102 Words and Terms Defined page 57

ARTICLE VII SPECIAL PROVISIONS GOVERNING OWNERSHIP (CONDOMINIUM) SUBDIVISIONS page 66

ARTICLE VIII ADOPTION OF REGULATIONS AND AMENDMENTS

8-101 Original Enactment page 67

APPENDICES

APPENDIX A: ROADWAY AND DRAINAGE TECHNICAL STANDARDS

APPENDIX B: PERFORMANCE/MAINTENANCE AGREEMENT

SUBDIVISION REGULATIONS

MAURY COUNTY, TENNESSEE

Original Adoption: 12/19/85
Adoption of Comprehensive Revisions: 4/6/09 (Effective 6/8/09)
Latest Revisions: Effective 5/2/16

MAURY COUNTY REGIONAL PLANNING COMMISSION
Columbia, Tennessee

ARTICLE I

GENERAL PROVISIONS

1-101 **Title** -- These Regulations shall be known as the Subdivision Regulations of Maury County, Tennessee, as hereinafter cited as "Regulations".

1-102 **Authority** -- These Subdivision Regulations are adopted by the Maury County Regional Planning Commission (hereinafter referred to as "Planning Commission"), in pursuance of the authority and powers granted by Sections 13-3-401 through 13-3-411, Tennessee Code Annotated (TCA). Having adopted a Major Road Plan for the jurisdictional area, having filed a certified copy of the Major Road Plan with the Maury County Register of Deeds (hereinafter referred to as "County Register") as required by TCA 13-3-402, and having held a public hearing as indicated in ARTICLE VII (Section 7-101) of these Regulations, the Planning Commission has fulfilled the requirements set forth in state law as prerequisites to the adoption of these Regulations.

1-103 **Jurisdiction** -- These Regulations shall apply to all subdivisions, as herein defined, located within the jurisdiction of the Planning Commission. No land shall be subdivided within the jurisdictional area until the applicant submits a plat as required by these Regulations, obtains Planning Commission approval of the plat, and records the approved plat with the County Register.

1-104 **Policy and Purpose** -- These Regulations are adopted for the following purposes:

(1) To promote the public health, safety, and general welfare of the jurisdictional area.

(2) To guide the development of the jurisdictional area in accordance with the General Plan, considering the suitability of nonresidential and public areas and having regard for the most beneficial land use in such areas.

(3) To provide for adequate light, air, and privacy; to secure safety from fire, flood, and other dangers; and to prevent overcrowding of the land and undue congestion of population.

(4) To enhance the character and economic stability and encourage the orderly, beneficial development of the jurisdictional area.

(5) To conserve the value of land, buildings, and improvements throughout the jurisdictional area and to minimize detrimental conflicts among the uses of land and structures.

(6) To guide public and private policy and action providing for transportation, water, sewerage, schools, recreational areas, solid waste, stormwater, and other public requirements and facilities.

(7) To provide for the most beneficial relationship between the uses of land and buildings and the efficient traffic movement throughout the jurisdictional area.

(8) To establish reasonable standards of design and procedures for subdivisions and resubdivisions; to further the orderly layout and use of land, and to ensure proper legal descriptions and proper monumentation of land.

(9) To ensure that public facilities are available and will have a sufficient capacity to serve the proposed subdivision.

(10) To prevent the pollution of air, streams, sinkholes and ponds; to assure the adequacy of drainage facilities; to safeguard the water table; and to preserve the integrity, stability, character, and value of the jurisdictional area.

(11) To preserve the natural character and topography of the jurisdictional area, and to ensure appropriate development with regard to these natural features.

(12) To provide for open spaces through efficient design and layout of the land as established in the Zoning Resolution.

(13) To encourage subdivision design to maximize the conservation of all forms of energy.

1-105 Interpretation, Conflict, and Severability

1-105.1 **Interpretation** -- These Regulations shall be held to be the minimum requirements for the promotion of the public health, safety, and general welfare. The applicant shall be responsible for complying with pertinent Federal, State and Local laws and regulations.

1-105.2 **Conflict with Public and Private Provisions** --

Public Provisions -- These Regulations are not intended to interfere with, abrogate, or annul any other resolution, ordinance, rule, or regulation, statute, or other provision of law. Where any provision of these Regulations imposes restrictions different from those imposed by any other resolution, ordinance, rule, regulation, statute or other provision of law, whichever provisions are more restrictive or impose higher standards shall control.

Private Provisions -- These Regulations are not intended to abrogate any easement, covenant, or any other private agreement or restriction; provided, that where these Regulations are more restrictive or impose higher standards than such easement, covenant, or other private agreement or restriction, the requirements of these Regulations shall govern.

Where any private provision exceeds the standards set forth herein, such shall be considered a private contract between the parties of interest, and as such is beyond the jurisdiction of the Planning Commission.

1-105.3 **Severability** -- If any part or provision of these Regulations or application thereof to any person or circumstances is adjudged invalid by any court of competent jurisdiction, such judgment shall be confined in its operation to the part, provision, or application directly involved in the controversy in which such judgment shall have been rendered and shall not affect or impair the validity of the remainder of these Regulations or the application thereof to other persons or circumstances. The Planning Commission hereby

declares that it would have enacted the remainder of these Regulations without any such part, provision, or application.

1-106 Amendments

1-106.1 **Enactment** -- For the purpose of providing for the public health, safety, and general welfare, the Planning Commission may, from time to time, amend these Regulations. Before the adoption of any amendment to these Regulations, a public hearing shall be held by the Planning Commission as required by TCA 13-3-403.

1-106.2 **Codification and Distribution** -- Following the adoption of any amendment to these Regulations, such amendments shall be incorporated into the text of these Regulations in the following manner:

(1) Replacement pages shall be prepared incorporating the new or changed language. Each such new or replacement page shall have the amendment number and shall be dated so as to indicate the date of the last revision of the page.

(2) In ARTICLE VII of these Regulations, each adopted amendment shall be numbered consecutively and printed on pages separate from any other amendment and in a manner that fully states any language deleted from these Regulations and any language added and the place in the text of each such change.

1-107 **Procedures for Re-Subdivision** -- If any change in an approved or recorded subdivision plat would affect the layout of any public way shown on such plat, or area reserved thereon for public use, or any lot line, or if it would affect any map, plan, or plat legally recorded before the adoption of any subdivision regulations, such amendment shall be approved by the Planning Commission by the same procedure, rules, and regulations as for a subdivision.

1-108 **Conditions** -- Regulation of the subdivision of land and the attachment of reasonable conditions to the subdivision of land are exercises of valid police power delegated by the State to the Planning Commission. The applicant has the duty of compliance with reasonable conditions imposed by the Planning Commission for design, dedication, improvement, and restrictive use of the land so as to provide for the physical and economical development of the jurisdictional area and for the safety and general welfare of future lot owners in the subdivision and of the community at large.

1-109 **Vacation of Plats** – Subject to approval by the Planning Commission, a plat or a part of a plat may be vacated by the owner of the premise, at any time before the sale of any lot described therein, by a written instrument, to which a copy of such plat shall be attached, declaring the plat or part of the plat to be vacated. The Planning Commission shall follow the same procedure for approval of such instrument as required for approval of plats. The Legislative Body may reject any such instrument that abridges or destroys any public rights in any of its public uses, improvements, or public ways. Such an instrument shall be executed, acknowledged, or approved, and duly recorded or filed; the instrument shall operate to void the recorded plat and divest all public rights in the public ways and public grounds and all dedications laid out or described in such

plat. When any lot or lots have been sold, the plat may be vacated in the manner herein provided only if all the owners of lots in such platted area join in the execution of such writing.

1-110 Variances

1-110.1 **General** -- If the Planning Commission finds that extraordinary hardships or practical difficulties may result from strict compliance with these Regulations, a variance from these Regulations may be granted; provided, such variance shall not have the effect of nullifying the general intent and purpose of these Regulations and provided further that the Planning Commission shall not recommend variances unless it shall make findings based upon written evidence presented to it in each specific case that:

(1) The granting of the variance will not be detrimental to the public safety, health, or welfare, or be injurious to other property or improvements in the general area in which the property is located.

(2) The conditions upon which the request for a variance is based are unique to the property for which the variance is sought and are not applicable generally to other property.

(3) Because of the particular physical surroundings, shape, or topographical condition of the specific property involved, a particular hardship (not self-imposed) to the owner would result, as distinguished from a mere inconvenience, if the strict letter of these Regulations were carried out.

(4) The request for a variance shall be submitted in writing by the applicant referencing the specific section(s) within the subdivision regulations for which the variance is being requested.

(5) The variance will not, in any manner, alter the provisions of the General Plan, the Major Road Plan, or any Zoning Resolution.

(6) Where the Planning Commission concludes that the purpose of these Regulations may be specifically served to an equal or greater extent by an alternative proposal, condition, or circumstance, it may approve other variances to these Regulations.

1-110.2 **Procedures** -- In approving any variances from these Regulations, the Planning Commission shall state fully in the Minutes the grounds for the variance and all of the facts upon which the decision is made.

1-110.3 **Conditions** -- In approving variances, the Planning Commission may impose such conditions as, in its judgment, will secure substantially the objectives, standards, and requirements of the Regulations.

1-111 Enforcement, Violation, and Penalties

1-111.1 General

Authority -- The enforcement of these Regulations and the penalties for violations are provided pursuant to Title 13, Tennessee Code Annotated (TCA) 13-3-401 through 13-3-411.

Enforcing Officer -- It shall be the duty of the County Building Commissioner (hereinafter referred to as the "Enforcing Officer") to enforce these Regulations and to bring to the attention of legal counsel any violations or lack of compliance herewith.

Recording of Plats -- Pursuant to TCA 13-3-402, no plat of a subdivision of land within the jurisdictional area shall be received or recorded by the County Register until the plat has received final approval of the Planning Commission in accordance with these regulations, and such approval has been endorsed in writing on the plat by the Secretary of the Planning Commission in the manner prescribed in ARTICLE II of these Regulations.

Use of Unapproved Plats -- Pursuant to TCA 13-3-410, no owner or agent of the owner of any land shall convey such land contrary to the provisions stated therein.

Metes and Bounds Subdivisions – The subdivision of any lot or parcel of land by use of metes and bounds description without complying with the plat provisions of these regulations shall not be permitted. All such described subdivisions shall be subject to all of the requirements of these regulations.

Public Ways and Utilities -- Pursuant to TCA 13-3-406, the Legislative Body shall not nor shall any public authority accept, lay out, open, improve, grade, pave, or light any public way, lay or authorize the laying of water mains or sewers, or construct or authorize the construction of other facilities or utilities in any public way located within the jurisdictional area unless such public way shall have been accepted, opened, or otherwise received the legal status of a public way prior to the attachment of the Planning Commission's jurisdiction, or unless such public way corresponds in its location and lines to a way shown on a subdivision plat approved by the Planning Commission, and for which guarantee(s) in lieu of improvements has been posted or on a public way plat made by the Planning Commission.

However, the Legislative Body may override the Planning Commission as provided in TCA 13-3-406.

In case of any state highway constructed or to be constructed within the jurisdictional area with state funds as a part of the state highway system, the submission to the Planning Commission shall be by the Tennessee Commissioner of Transportation, who shall have the power to overrule the disapproval of the Planning Commission.

Building Permits -- No building permit shall be issued for the construction of any building or structure located on a lot subdivided or sold in violation of any provision of these Regulations.

Access to Lots by Public Way or Private Easement -- Pursuant to 13-3-411, Tennessee Code Annotated, no building permit shall be issued, and no building or structure shall be erected on any lot within the jurisdictional area, unless the public way giving access to the lot upon which the building or structure is proposed to be placed shall have been accepted or opened or shall have otherwise received the legal status of a public way as provided by law.

Provided, further, that when a permanent easement to a public way is used as access to a lot or tract of land having been or being separated from other property, such easement shall be at least 50 feet in width for the entire length and shall not be used to provide access to more than 2 lots or tracts of lands. Easements to provide access are not permitted for subdivisions that include 3 or more lots.

Provided, further, that in the event that access is provided to more than 1 lot or tract of land, the Final Plat and the deed must show the easement and shall contain the following language:
The easement for the common driveway shall run with the land and shall be binding on and shall inure to the benefit of all parties for whose benefit the common driveway exists, their heirs, successors and assigns.

1-111.2 Penalties for Violations

Recording of Unapproved Plats -- Any County Register receiving, filing, or recording a plat of a subdivision in violation of Section 1-111.1 of these Regulations shall be deemed guilty of a Class A misdemeanor, punishable as other misdemeanors as provided by TCA 13-3-402.

Use of Unapproved Plats -- Any owner or agent of the owner of any land who violates Section 1-111.1 of these Regulations shall be deemed guilty of a misdemeanor, punishable as other misdemeanors as provided by TCA 13-3-410.

1-111.3 Civil Enforcement -- Appropriate actions and proceedings may be taken in equity to prevent any violation of these Regulations, to prevent unlawful construction, to recover damages; to restrain, correct, or abate a violation, or to prevent illegal occupancy of a building, structure, or premise; these remedies shall be in addition to the penalties described in Section 1-111.2 of these Regulations.

1-112 Savings Provision

These regulations shall not be construed as abating any action now or pending under, or by virtue of prior subdivision regulations; or as discontinuing, abating, modifying or altering any penalty accruing or about to accrue; or as affecting the liability of any person; or as waiving any right of the Planning Commission under any section or provision existing at the time of adoption of these regulations; or as vacating or annulling any rights obtained by any person by lawful action of the Planning Commission, except as expressly provided otherwise in these regulations

ARTICLE II

PROCEDURES AND REQUIREMENTS

2-101 General Procedures

2-101.1 **Plat Approval Requirements** -- Before any contract is executed for the sale of any parcel of land which is proposed to be subdivided and before any permit for the erection of any structure in a proposed subdivision shall be granted, the subdividing owner or his authorized agent shall apply for and secure the Planning Commission's approval of the proposed subdivision in accordance with the procedures of this ARTICLE.

2-101.2 **Classification of Subdivisions** -- The Planning Commission shall classify each subdivision proposal as defined herein.

Review Procedure -- The applicant shall follow the procedures described below in order to secure plat approval.

(1) Administratively (Staff) Approved Subdivision

(a) Administratively Approved Subdivisions consist of not more than two (2) lots as defined in Article 6 (Definitions), Paragraph 6-102 (Words and Terms Defined) as permitted by TCA 13-3-402. If the 2-lots do not comprise the total property being subdivided then it cannot be approved as an Administratively Approved Subdivision.

(b) Submittal of a Final Plat prepared in accordance with the specifications herein, for approval by Maury County's Secretary of the Planning Commission, the Enforcing Officer or designee, and the E911 Director.

(c) At the discretion of the Enforcing Officer or designee, the Final Plat submitted for Administrative Approval may be referred to the Planning Commission for review and approval, should in the opinion of the Enforcing Officer or designee the submittal includes, but is not limited to, complexities of the application, concerns regarding the configuration or concerns regarding existing or proposed easements.

(2) Minor Subdivision --

(a) Pre-application conference with the Enforcing Officer including submittal of a scale drawing or survey of the proposed subdivision for preliminary discussion and review with the Staff.

(b) Submittal of a final plat prepared in accordance with the specifications in Section 5-104, herein, for approval by the Planning Commission.

(c) A Minor Subdivision contains 3 to 5 lots fronting on an existing public way; not involving any new or improved public way, the extension of public facilities, or the creation of any public improvements, and not in conflict with any provision of the adopted General Plan.

(3) **Major Subdivision** --

(a) Preapplication conference on the subdivision with the Planning Commission and/or Enforcing Officer to the Planning Commission, generally including a Concept Plan and discussion of the proposed area to be subdivided.

(b) **Major Subdivision** – All subdivisions not classified as Administratively (Staff) Approved Subdivisions or Minor Subdivisions including but not limited to subdivisions of 6 or more lots or subdivisions of any size requiring any new or improved road, the extension of government facilities, or the creation of any public improvements, or containing any flood prone area.

(c) Submittal of the preliminary plat, prepared in accordance with Section 5-102 herein, for Planning Commission approval.

(d) Submittal of construction plans and design documents.

(e) Securing of approval from other public agencies.

(f) Submittal of the final subdivision plat, prepared in accordance with Section 5-104 herein, for Planning Commission approval.

2-101.3 **Official Submission Date for Plats** -- The date of the meeting of the Planning Commission at which the subdivision plat is heard shall constitute the official submittal date of the plat at which the statutory period required in TCA 13-3-404 for formal approval or disapproval of the plat shall commence. The plat must be on the official Planning Commission agenda. The applicant is required to meet all submittal deadlines. The official submittal date shall not occur until the staff or the Planning Commission deems such application to be complete.

2-102 Concept Plan

2-102.1 **Application Procedure and Requirements** -- The applicant shall file with the Planning Commission a Concept Plan. The failure of the applicant to satisfy the requirements of this section with full and correct information may be used as a basis for disapproval of a Concept Plan. The Concept Plan shall be prepared in accordance with but not limited to the following:

(1) Be presented at the office of the Enforcing Officer.
(2) The Concept Plan is a master planning document. It will provide the Planning Commission with the initial intent for the Master Plan for developing the entire property.
(3) Provide a letter from the property owner, if different than the developer, acknowledging and granting the submission of the application and stating the agents that are authorized to act as a representative.
(4) The applicant or authorized representative shall be present at Planning Commission meetings regarding the application.

(5) Provide a water availability letter from the water utility provider. Provide the name, address, phone, fax, for the contact person of the utility provider on the drawing.

(6) Provide the proposed method of sewage disposal; provide copies of published soils maps or a Preliminary Soils Map prepared by a soils scientist. Documents submitted must show the boundary of the property. Sources of published documents include USDA NCRS. Provide a letter from a soils scientist with their written opinion regarding the probability that the existing soils can adequately serve the proposed development.

(7) Be provided with a USGS topographic map with the property boundary drawn and with the proposed road layout shown on the USGS map.

(8) Be provided with a copy of the latest county tax map with the property identified by shading or highlighting and with the proposed road layout shown on the tax map. Include ortho GIS aerial view.

(9) Be accompanied by a minimum of 8 folded copies of the Concept Plan for initial Planning Commission staff review and comment. After receiving staff comments and after making and/or correcting items addressed by staff, applicant shall submit 15 revised folded copies for submittal to and review by the Planning Commission. The document shall also be provided to the staff in a digital PDF format.

(10) All applications shall meet the deadlines as established by the Planning Commission. These established deadlines are shown on the adopted Meeting Calendar available from the Enforcing Officer. Fees shall be paid in full by the application deadline.

2-102.2 **Purpose of Concept Plan** -- The applicant shall be required to submit a Concept Plan for review by the Enforcing Officer and/or the Planning Commission. The Concept Plan is to be a concept plan for discussion of design, approval process and should be used to discuss factors which will have an impact on the proposed development and to advise the applicant of various issues, requirements and possibilities before substantial amounts of time and money have been invested in a very detailed proposal which may contain elements contrary to these Regulations.

2-102.3 **Concept Plan Requirements** --

General – Concept plans submitted to the Planning Commission shall be drawn to a scale no smaller than two hundred (200) feet to an inch. The Concept Plan shall be neat, legible and with correct spelling.

Features – The Concept Plan shall include information to include but not be limited to the following:

(1) Vicinity map that is legible and provides sufficient detail to locate the property. The preference is to use the County tax maps or TDOT county road map. Locate the perimeter of the property on the vicinity map; show the relation of the subdivision to all public ways, railroads,

and water courses in all directions to a distance of at least one-half mile (scale: one inch to one thousand (1,000) feet);

(2) Proposed name of the subdivision;

(3) List the Tax Map(s) & Parcel Number(s);

(4) List Deed Book-Page Number for property deed;

(5) the property to be developed with the boundary of the property drawn to scale; list the size of the property;

(6) the names of the owners of adjoining the property; adjacent and abutting roads and lots;

(7) notation of any existing legal rights-of-way or easements, or other encumbrances affecting the property;

(8) topography of the site, at no more than five (5) foot intervals, extended at least 100 feet into adjacent properties;

(9) areas which may be affected by flooding; show streams and floodplain and floodway fringe areas;

(10) Proposed roadway and lot layout drawn to scale; a master Plan of the entire property is to be submitted;

(11) existing utilities and storm water facilities; label size and name of utility company;

(12) Other features to include, but are not limited to, railroads, structures, cemeteries, sinkholes, tree lines, ponds, lakes, driveways;

(13) proposed phasing, if any;

(14) north arrow (magnetic north or true north);

(15) owner(s) name, address, phone #, fax #, email address;

(16) developer(s) name (if different than owner), address, phone #, fax #, email address;

(17) consultant(s) name, address, phone #, fax #, email address;

(18) zoning classification of the property and adjacent and abutting property to include property across any roads or rights-of-way;

(19) Reference to the latest FEMA flood map;

2-102.4 **Expiration of Approval** -- The Concept Plan shall be valid for a period of 1-year from the date of approval. After 1-year from the date of approval 1-year the Concept Plan must be re-approved and shall meet the standards in effect at the time of the re-approval. For the purposes of these Subdivision Regulations a Concept Plan is not defined as a Development Plan or considered to be a Development Plan as outlined in TCA 13-3-413 and as amended, regarding the vesting period for development standards.

2-103 Preliminary Plat

2-103.1 **Application Procedure and Requirements** -- The applicant shall file with the Planning Commission a Preliminary Plat. The failure of the applicant to satisfy the requirements of this section with full and correct information may be used as a basis for disapproval of a Preliminary Plat. The Preliminary Plat shall be prepared in accordance with but not limited to the following:

(1) Be presented at the office of the Enforcing Officer.

(2) The Preliminary Plat is a detailed engineering document. Such plat will reflect results of design decisions that have been made in the process of adapting the general concepts contained within the conceptual plan to the engineering of the site. **Prior to final approval of a Preliminary Plat and Construction Drawings no clearing of trees (with the exception of those required to facilitate surveying activities) or site grading in any form shall be undertaken.**

(3) Provide a letter from the property owner, if different than the developer, acknowledging and granting the submission of the application and stating the agents that are authorized to act as a representative.

(4) The applicant or authorized representative shall be present at Planning Commission meetings regarding the application.

(5) Be accompanied by a minimum of 8 folded copies of the Preliminary Plat for initial administrative review and comment. After receiving staff comments and after making and/or correcting items addressed by staff, applicant shall submit 15 revised folded copies for submittal to and review by the Planning Commission. The document shall also be provided to the staff in PDF format.

(6) All applications shall meet the deadlines as established by the Planning Commission. These established deadlines are shown on the adopted Meeting Calendar available from the Enforcing Officer. Fees shall be paid in full by the application deadline.

2-103.2 **Administrative Review** -- An administrative review meeting shall be conducted on the preliminary plat and any exhibits and documents submitted in conformance with these Regulations. This review shall include the Enforcing Officer and any other appropriate representative. The review shall be held prior to the regularly scheduled Planning Commission meeting

at which the plat is on the official agenda. The findings of the administrative review shall be provided to the applicant and presented to the Planning Commission.

2-103.3 **Notice of Hearing** -- The Planning Commission shall hold a hearing as required by TCA 13-3-404 on each plat brought before it.

2-103.4 **Preliminary Approval** -- After the Planning Commission has reviewed the Preliminary Plat, preliminary design document(s), exhibits, and the results of the administrative review, the applicant shall be advised of any required changes. The Planning Commission shall approve, conditionally approve, or disapprove the Preliminary Plat within 60 days after the date of the meeting of the Planning Commission at which the hearing on Preliminary Plat approval, including adjourned date thereof, is held.

A certificate of preliminary approval shall be issued by the Secretary of the Planning Commission, upon demand, and the applicant may proceed to apply for Final Plat approval in the manner prescribed by Section 2-104 of these Regulations.

After the Planning Commission approves, conditionally approves, or disapproves the preliminary plat, one copy of the proposed Preliminary Plat shall be returned to the applicant, upon request, with the date of approval, conditional approval, or disapproval. If a Preliminary Plat is disapproved, the Planning Commission shall state specific reasons for disapproval that shall be entered into the Minutes of the meeting.

Before the Planning Commission approves a preliminary plat showing land reserved for any public use, the Planning Commission shall obtain approval for the land reservation from the Legislative Body or appropriate governmental agency.

2-103.5 **Public Improvements** -- The Planning Commission may require that all public improvements be installed and dedicated prior to the signing of the final plat by the Secretary of the Planning Commission. If the Planning Commission does not require that all public improvements be installed and dedicated prior to signing of the final plat, an adequate guarantee(s) in lieu of improvements shall be approved. The amount of such guarantee(s) shall be established by the Planning Commission based upon the recommendation of the appropriate governmental representative(s) or utility representative.

Such guarantee(s) shall be submitted by the applicant and approved by the Planning Commission prior to the Secretary of the Planning Commission signing the plat. The Planning Commission shall require the applicant to indicate on the plat all public ways and improvements to be dedicated; all districts for water, fire, and utility improvements which shall be required to be established or extended; and any other special requirements deemed necessary by the Planning Commission in order for the subdivision plat to conform to the General Plan and the plan for the jurisdictional areas.

2-103.6 **Expiration/Vesting of Preliminary Plat** -- The vesting period for development standards as to approved development plans shall be in as outlined in TCA 13-3-413 and as amended.

2-103.7 **Zoning Regulations** -- Every plat shall conform to any existing zoning and subdivision regulations applicable at the time of proposed Final Plat approval, except that any Final Plat which has received Preliminary Plat approval shall be exempt from any subsequent amendments to such Zoning Resolution or these Regulations rendering the plat nonconforming as to bulk, use, or development standards, provided that Final Plat approval is obtained within the effective period of Preliminary Plat approval set forth in herein.

2-103.8 **Preliminary Plat Requirements**

General – The Preliminary Plat shall be prepared by a registered professionals to included surveyor, landscape architect, architect, land planner, or engineer. If the Preliminary Plat requires engineering or engineering data then the Preliminary Plat and documents must be sealed by a registered engineer. The scale shall be no smaller than two hundred (200) feet to an inch. The plat shall be neatly and legibly presented. The sheets shall be numbered in sequence if more than one sheet is used.

Features – The Preliminary Plat shall include and require but not be limited to the following:

(1) Vicinity map that is legible and provides sufficient detail to locate the property. The preference is to use the County tax maps or TDOT county road map. Locate the perimeter of the property on the vicinity map; show the relation of the subdivision to all public ways, railroads, and water courses in all directions to a distance of at least one-half mile (suggested scale: one inch to one thousand (1,000) feet);

(2) the location of the property to be subdivided with respect to surrounding property(s) and public way(s);

(3) Be presented neat, legible and with correct spelling

(4) Be provided with a USGS topographic map, or copy, with the perimeter of the property identified.

(5) Be provided with a copy of the latest county tax map with the property identified. Include ortho GIS aerial view.

(6) List the Tax Map(s) & Parcel Number(s)

(7) List Deed Book-Page Number for property deed

(8) the names of all adjoining property owners of record, or the names of adjoining developments;

(9) the names of adjoining and abutting roads;

(10) the location and dimensions of all boundary lines of the property, figured to the nearest hundredth of a foot;

(11) the location of existing public ways, easements, water bodies, streams, and other pertinent features, such as swamps, railroads, buildings, parks, cemeteries, drainage ditches, and bridges, as determined by the Planning Commission;

(12) the location and width of all existing and proposed easements, alleys, and other public ways, and building setback lines;

(13) the location, dimension, and area of all proposed or existing lots;

(14) the position of all existing or proposed buildings within proposed condominium developments;

(15) the location and dimension of all property proposed to be set aside for park or playground use or other public or private reservation, with designation of the purpose thereof, and conditions, if any, of the dedication or reservation;

(16) the limits of floodway and floodway fringe areas and the associated regulatory flood elevation and regulatory flood protection elevation, as determined necessary by the Planning Commission;

(17) With expert assistance, the applicant shall prepare a report, prepared by a Tennessee Registered Civil Engineer, on any proposed subdivision containing or abutting a flood-prone area. Such report shall estimate the discharge of the regulatory flood; determine the specific flooding threat at the site of the proposed subdivision; and indicate whether the subdivision is located in a floodway or floodway fringe area by: (a) calculation of water surface elevations and regulatory flood protections based upon a hydraulic analysis of the capacity of the stream channel and over-bank areas to convey the regulatory flood. (b) Computation of the floodway required to convey the regulatory flood without increasing natural flood heights of the regulatory flood more than one foot at any point. (c) Unless otherwise established or justified, computation of increases in flood heights caused by any encroachment shall be based upon the evaluation and justification by a registered professional engineer's study and report. No increase in flood storage attributable to encroachments on the floodplain of any river or stream shall be permitted in any one reach or for the cumulative effect of several reaches;

(18) the name and address of the owner(s) of land to be subdivided, the developer if other than the owner, and the land surveyor or other person preparing the plat;

(19) the date of the plat, approximate true north point, scale, and title of the subdivision;

(20) sufficient data to determine readily the general location, bearing, and length of all lines necessary to reproduce such lines within the area to be subdivided;

(21) the name of the subdivision and all new public ways, as approved by the Planning Commission;

(22) the zoning classification of all zoned lots, as well as an indication of all uses other than residential proposed by the developer;

(23) the distance and bearing of one of the corners of the boundary of the subdivision to the nearest intersection of existing public ways and to the original corner of the original survey of which it is a part;

(24) Contours at vertical intervals of not more than two (2) feet. (contours to be field surveyed or taken from aerial photographs not older than 2-years). For aerial photographic contours the control points and coordinates shall be shown. Provide date when control points were set and aerial photo date. Also list the name, address, phone number and contact information for the surveyor and aerial photogrammetry firm;

(25) Provide updated water availability letter from the water utility provider. Provide the Name, address, phone, fax, contact person of the utility provider on the drawing. Failure to provide this item with the submittal application will deem the application incomplete;

(26) Provide sewer availability letter. Documentation from TDEC regarding soils availability for the preliminary plat shall be provided. The letter from TDEC must correspond to the Preliminary Plat lot layout. Failure to provide this item with the submittal application will deem the application incomplete;

(27) Provide a stream determination letter from TDEC or a consulting biologist. Provide the Name, address, phone, fax, contact person of the TDEC contact or consultant on the drawing. Failure to provide this item with the submittal application will deem the application incomplete;

(28) Provide the Name, address, phone, fax, contact person of all overhead utility provider(s) and underground utility providers adjacent to the property and located within the property on the drawing;

(29) map parcel numbers as recorded on the land tax maps of the county;

(30) The following notations:

- **(a)** location of drainage easements;
- **(b)** location of site easements;
- **(c)** location of reservations;
- **(d)** location of streams, wet weather conveyances and any buffers;
- **(e)** notation regarding FEMA FIRM Map reference panel and whether any portion of the property or property adjacent to the project lies within the 100-year flood elevation.
- **(f)** for any lot where public sewer or water systems are not available, the following:
  - **(i)** areas to be used for sewage disposal and a soil scientists evaluation, or if the Planning Commission desires, any other acceptable data to show that the site can be served effectively by on-site sewage disposal;
  - **(ii)** water wells (existing and proposed); and,
  - **(iii)** rock outcroppings, marshes, springs, sinkholes, wetlands; natural storm drains, and other outstanding topographical features;

(31) draft of proposed restrictive covenants, if any, to be imposed and designation of areas subject to special restrictions; and;

(32) a form for endorsement of Planning Commission approval of the Preliminary Plat which shall read as follows:

> Approved by the Maury County Regional Planning Commission, with exceptions or conditions as are indicated in the Minutes of the Planning Commission on _____ (date).
>
> Preliminary Plat approval shall not constitute final approval for recording purposes.

2-104 Construction Plans --

2-104.1 **Application Procedure and Requirements** -- The applicant shall file with the Planning Commission construction plans & details, stormwater drainage calculations, stormwater management calculations, reports, other agency approvals and other documents as may be required by the Planning Commission for construction related to the development. The failure of the applicant to satisfy the requirements of this section with full and correct information shall be cause for disapproval of the construction plans.

The Construction Plans shall be prepared in accordance with but not be limited to the information shown in Appendix A – Roadway and Drainage Technical Standards of these regulations

2-104.2 **Expiration/Vesting of Construction Plans** -- The vesting period for development standards as to approved development plans shall be in as outlined in TCA 13-3-413 and as amended. The re-approval shall meet the standards in effect at the time of the re-approval. Construction plans shall be prepared for all improvements required by these regulations. Plans shall be in compliance with the specifications in these regulations. Approval of plans must precede actual construction, and no Final Plat shall be considered by the Planning Commission until the required plans have been approved. The construction plans shall be prepared and sealed by a licensed Tennessee engineer engaged in the practice of civil engineering.

2-104.3 **Filling Within FEMA Flood Hazard Areas**

For areas within the regulatory flood hazard area as identified on a FEMA FIRM (Federal Emergency Management Agency Flood Insurance Rate Map) a LOMAR-F (Letter of Map Revision-Fill) is required.

The LOMAR-F is required prior to receiving Construction Plan approval

2-105 Final Subdivision Plat

2-105.1 **Application Procedure and Requirements** -- An applicant shall file with the Planning Commission a Final Plat. Approval of the required Construction Plans is a prerequisite to submission of the Final Plat application. The plat shall be prepared in accordance with the requirements herein:

(1) Include the entire subdivision, or section thereof, for which Final Plat approval is sought.

(2) Be accompanied by a minimum of 8 folded copies of the final subdivision plat for initial administrative review and comment. The copies of the Final Plat shall be folded into the format as required by the Staff. After receiving staff comments and after making and/or correcting items addressed by staff, applicant shall submit 15 revised folded copies for submittal to and review by the Planning Commission. The copies of the Final Plat shall again be folded into the format as required by the Staff. The document shall also be provided to the staff in PDF format.

(3) Comply substantially with the Preliminary Plat, when a Preliminary Plat is required. The Final Plat shall comply with the Preliminary Plat conditions of approval, if any.

(4) All applications shall meet the deadlines as established by the Planning Commission. These established deadlines are shown on the adopted Meeting Calendar available from the Enforcing Officer. Fees shall be paid in full by the application deadline.

(5) Be accompanied by formal irrevocable offers of dedication to the public of all public ways and uses, utilities, parks, and easements, and that all improvements included in the irrevocable offers of dedication shall be dedicated to the Maury County Government or appropriate agency, free and clear of all liens and encumbrances on the premise(s) or related to construction in a form approved by legal counsel as applicable. (The Final Plat shall be marked with a notation indicating the formal offers of dedication as shown in ARTICLE V of these Regulations.) Signing of the final plat by the Secretary of the Planning Commission or other agencies required to sign the Final Plat, does not constitute acceptance of the offers of dedication.

(6) Be accompanied by a written assurance from any utility company serving the area of the subdivision that necessary utilities will be installed and by proof that the applicant has submitted petitions in writing for the creation or extension of any utility districts as required by the Planning Commission upon preliminary plat approval.

(7) Be accompanied, if the Final Plat contains open space, or recreational facilities, or if any portion of the site is in common ownership, by the following documentation for approval by the Planning Commission:

(a) Plans for improvement and maintenance of the open space or facilities located thereon.

(b) Articles of incorporation and bylaws of the co-owners association or other legal entity (where open space or facilities are to be deeded to a co-owners association or similar organization acting on behalf of the joint owners of said property) charged with improving or maintaining the open space or facilities, and declaration of covenants and restrictions pertaining to each and every property within the subdivision.

(c) Declaration of covenants and restrictions pertaining to open space and facilities which assure the continued use of said facilities for the purpose intended, where open space or facilities are to be retained by the applicant.

(8) Approval of the required Construction Plans is a prerequisite to submission of the Final Plat application.

2-105.2 **Endorsement of Notations** -- The notations and certifications required by these Regulations to appear upon the final plat shall be endorsed by appropriate officials and other persons prior to application for final subdivision plat approval, except that the certificate of the Planning Commission approval shall be signed at the time specified in Section 2-106 of these Regulations.

2-105.3 **Hearing and Decision on Final Plat** -- The Planning Commission shall hold a hearing as required by TCA 13-3-404 on each Final Plat brought before it. The Planning Commission shall, within sixty (60) days after submission of the Final Plat, approve, require modification of, or disapprove the final subdivision plat by resolution, which shall set forth in detail any conditions to which the approval is subject, or reasons for disapproval.

The failure of the Planning Commission to act upon a Final Plat within the prescribed time shall be deemed approval of the Final Plat, and in such event, a certificate of approval, entitling the applicant to proceed as specified in Sections 2-105.5 and 2-106 of these Regulations shall be issued, upon demand, by the Secretary of the Planning Commission. The applicant, however, may agree to an extension of the time for Planning Commission review.

One copy of the final subdivision plat shall be returned to the applicant with the date of approval, conditional approval, or disapproval noted thereon.

2-105.4 **Guarantee in Lieu of Improvements** -- Prior to the signing of the Final Plat by the Secretary of the Planning Commission, the applicant shall submit, if required, a guarantee(s) in lieu of improvements, in a form satisfactory to legal counsel and in an amount satisfactory to the Planning Commission upon recommendation by the appropriate governmental representative. It shall include provisions that the principal of the guarantee(s) shall comply with all the terms and conditions of the final subdivision plat approval, as determined by the Planning Commission, including but without limitations, the performance of all required subdivision improvements & requirements and all off-site improvements & requirements.

2-105.5 **Expiration/Vesting of Final Plat** -- The vesting period for development standards as to approved development plans shall be in as outlined in TCA 13-3-413 and as amended.

2-105.6 **Final Plat Requirements**

General – The Final Plat shall be prepared on transparent drafting material at a scale one hundred feet (100') to the inch on sheets of county register plat book size. The use of an appropriate smaller scale may be permitted for lots larger than two acres. When more than one sheet is required, an index sheet of the same size shall be filed showing the entire subdivision with the sheets numbered in sequence.

Features – The Final Plat shall include but not be limited to the following:

(1) The name of the subdivision;

(2) Vicinity map that is legible and provides sufficient detail to locate the property. The preference is to use the County tax maps or TDOT county road map. Locate the perimeter of the property on the vicinity map; show the relation of the subdivision to all public ways, railroads, and water courses in all directions to a distance of at least one-half mile (suggested scale: one inch to one thousand (1,000) feet);

(3) List the Tax Map(s) & Parcel Number(s);

(4) List Deed Book-Page Number for property deed;

(5) list the size of the property;

(6) Label the scale and provide a graphic scale;

(7) owner(s) name, address, phone #, fax #, email address;

(8) developer(s) name (if different than owner), address, phone #, fax #, email address;

(9) name of the registered professional that prepared the Final Plat, address, phone #, fax #, email address;

(10) The location of the property to be subdivided with respect to surrounding property(s) and public ways;

(11) The names of all adjoining property owners of record or the names of adjoining developments;

(12) zoning classification of the property and adjacent and abutting property to include property across any roads or rights-of-way;

(13) The names of adjacent and abutting roads;

(14) The exact boundary lines of the tract, determined by a field survey, showing angles to the nearest minute and distance to the nearest one hundredth of a foot. The survey shall be a Category "1" survey that meets or exceeds the standards set forth in Title 62, Chapter 18, of the Tennessee Code Annotated for the class of survey required by these regulations. The survey shall be tied into the Tennessee State Plane Coordinate System. A minimum of 1 concrete monument with GPS point per each 50-lots shall be placed on the boundary that shall be identified with the correlating State Plane coordinates. The developer shall be required to provide a digital copy of the Final Plat to the Planning Commission after approval of the Final Plat. This is a prerequisite to the Secretary of the Planning Commission signing the Final Plat. This is to facilitate the incorporation of the development data into the Maury County GIS mapping system. The developer is required to coordinate data requirements with the Maury County Tax Assessors Office.

A distance and bearing shall be provided which will link a point on the boundary of the subdivision to a monument in right-of-way of the nearest prominent public way intersection;

(15) The location of all public ways, easements, water bodies, large streams or rivers, railroads, parks, and cemeteries;

(16) notation regarding FEMA FIRM Map reference panel and whether any portion of the property or property adjacent to the project lies within the 100-year flood elevation;

(17) The limits of floodway and floodway fringe areas and the regulatory flood elevation and regulatory flood protection elevation. The minimum lowest floor elevation shall be indicated on the Final Plat for each affected lot. One concrete monument with bench mark elevations shall be placed along the floodplain, for each 2,000 linear feet of floodplain, for verification of constructed elevations;

(18) The location and width of all easements and rights-of-way for public ways, as well as the building setback lines on all lots;

(19) The location, dimensions, and area of all lots. All dimensions shall be field run to the nearest one hundredth of a foot and angles to the nearest minute. Lot areas shall be shown to the nearest tenth of a square foot;

(20) The location, area, and dimensions, to the accuracy set forth in paragraph 8 above, of all property to be set aside for park or playground use or other public or private reservation, with a designation of the purpose thereof, and conditions, if any, of the dedication or reservation;

(21) The final plat of a condominium subdivision shall contain, in addition to the other information required by this section:

(a) an "as-built" building location and boundary survey showing complete and accurate dimensions and angles of the boundary of the parcel(s) on which the condominium is located, together with exterior dimensions and locations relative to those boundaries of the building(s) which constitute the condominium subdivision;

(b) Provide location of survey bench mark(s) with elevation and coordinates. In meeting these requirements, it is only necessary that the upper and lower limits of each level of each condominium unit be identified specifically in relation to the vertical reference (e.g., an appropriate permanent monument or other acceptable reference datum or fixed known point); elaborate exterior elevations and architectural detail are not necessary to satisfy this requirement; and,

(c) any other special information which the Planning Commission may require to protect the rights of future owners of the condominium or the public in general.

(d) Requirements of the TN horizontal property regime requirements;

(22) The name and address of the owner(s) of the land being subdivided;

(23) Provide copy of the deed and proof of ownership;

(24) Provide letter from the property owner authorizing the consultant(s) to represent the owner and developer;

(25) The date of the plat, approximate true north point, scale, and title of the subdivision;

(26) Sufficient data to determine readily the location, bearing, and length of all lines necessary to reproduce such lines upon the ground. This shall include the radius, central angle, and tangent distance for the centerline of the curved public ways and curved property lines that are not the boundary of curved public ways. The location of all concrete monuments and pins shall be indicated on the plat;

(27) The names of all roads;

(28) The zoning classification of all lots, as well as an indication of uses other than residential proposed by the applicant;

(29) The total acreage within the subdivision;

(30) Lot numbers, where required;

(31) The line size and location of water and sewer facilities to include the name of the utility providers;

(32) The location of all fire hydrants;

(33) The dimensions of all driveway culverts;

(34) For any lot where public sewer or water system is not available, the following shall be shown:

(a) Graphically show on each lot the areas to be used for sewage disposal. A note shall be added to the Final Plat to state: "The graphic areas shown are provided for informational purposes to Owners & Builders. If the soils areas are disturbed or encroached upon, the Owners and/or Builders shall coordinate with the Tennessee Department of Environment & Conservation to obtain additional approvals prior to being issued a Building Permit or a Certificate of Occupancy. and,

(b) water wells (existing and proposed);

(35) Applicable certifications in the form required by these regulations shall appear upon the final plat. All required certificates shall bear the signature of the approving or authorizing agent at the time of application for final plat approval, except that the form for endorsement of the Planning Commission's approval for recording shall appear unsigned at the time of application for approval;

(36) Tennessee Department of Environment & Conservation (Division of Groundwater Protection), public water and sewer design layout and approval stamps, if applicable; also, actual design plans for filing in appropriate governmental representative's office;

(37) Commitment note may be printed or stamped on the final plat reflecting location and dimension of easements, or extent of other agreements or factual data, in lieu of graphical illustration, when applicable, and as approved by the Planning Commission;

(38) List or reference restrictions or covenants self-imposed by the developer.

2-105.7 <u>Final Plat Certificates</u>

(1) Certification identifying the landowner; that the landowner offers for dedication public ways, rights-of-way, and any site for public use; and that the landowner consents to the subdivision plan.

CERTIFICATE OF OWNERSHIP AND DEDICATION

I (we) hereby certify that I am (we are) the owner(s) of the property shown and described hereon as evidenced in Book Number _____, Page _____, County Register's Office, and that I (we) hereby adopt this plan of subdivision with my (our) free consent, establish the minimum building restriction lines, and that offers of irrevocable dedication for all public ways, public easements, utilities, and other facilities have been filed.

_____, 20__ _____

(Date) (Owner)

_____

Title (If Action for Partnership or Corporation)

(2) Certification by a registered land surveyor as to the accuracy of the land survey.

SURVEYOR'S CERTIFICATE

I hereby certify that to the best of my knowledge and belief the hereon shown subdivision plat represents a Category "1" Survey having an unadjusted ratio of precision of 1: 10,000 and is true and correct. Approved monuments have been placed as indicated. All side lot lines are at right angles or radial to a street unless otherwise noted.

_____, ___ _____

(Date) Registered Land Surveyor Number _____

(3) Certification of appropriate governmental or quasi-governmental official(s) that sewage disposal and/or water system(s) has/have been installed.

CERTIFICATE OF APPROVAL OF WATER SYSTEM

I hereby certify that the water system(s) outlined or indicated on the final subdivision plat entitled _____ has/have been installed in accordance with current local and state government requirements, or a sufficient bond or other surety has been filed to guarantee said installation.

_____, 20__ _____

(Date) Name, Title, and Agency or Authorized Approving Agent

CERTIFICATE OF APPROVAL OF PUBLIC SEWER SYSTEM

I hereby certify that the sewer system(s) outlined or indicated on the final subdivision plat entitled _____ has/have been installed in accordance with current local and state government requirements, or a sufficient bond or other surety has been filed to guarantee said installation.

_____, 20__ _____

(Date) Name, Title, and Agency or Authorized Approving Agent

CERTIFICATE OF APPROVAL OF
PRIVATE SUBSURFACE SEWAGE DISPOSAL

General approval is hereby granted for lots proposed hereon as being suitable for subsurface sewage disposal with the listed and/or attached restrictions.

Before the initiation of construction, the location of the house or other structures and plans for the subsurface sewage disposal system shall be approved by the local health authority.

_____, 20__ _____
(Date) Local Health Authority

(4) Certification of the final plat by appropriate governmental representative that the subdivider has complied with one of the following:

(i) installation of all public way improvements in accordance with the requirements of these regulations; or,

(ii) in lieu of compliance with subdivision improvement requirements, certification that surety has been posted by the subdivider in an amount approved by appropriate governmental representative to guarantee completion of all improvements.

CERTIFICATE OF APPROVAL OF PUBLIC WAYS
OR BOND POSTING

I hereby certify: (1) that all designated public ways on this final subdivision plat have been installed in an acceptable manner and according to the specifications of the Maury County Subdivision Regulations, or (2) that a performance bond or other surety has been posted with the Planning Commission to guarantee completion of all required improvements in case of default.

_____, 20___ _____
(Date) Appropriate Governmental Representative

(5) For a subdivision containing common open space or facilities, certification on the final plat of dedication of common areas in accordance with procedures established in these regulations.

CERTIFICATION OF COMMON AREAS DEDICATION

_____ in recording this plat has designated certain areas of land shown hereon as common areas intended for use by the homeowners within _____ (name of subdivision) for recreation and related activities. The above-described areas are not dedicated for use by the general public, but are dedicated to the common use of the homeowners within the named subdivision.

"Declaration of Covenants and Restrictions", applicable to the above named subdivision, is hereby incorporated and made a part of this plat.

_____, 20__ _____
(Date) Owner

(6) Certification on the final plat of Planning Commission approval for recording of the plat.

CERTIFICATE OF APPROVAL FOR RECORDING

I hereby certify that the subdivision plat shown hereon has been found to comply with the Maury County Subdivision Regulations, with the exception of such variances, if any, as are noted in the Minutes of the Planning Commission, and that it has been approved for recording in the Office of the County Register.

_____, 20__ _____
(Date) Secretary
Maury County Regional Planning Commission

(7) Certification on the final plat of E-911 Program approval.

E-911 PROGRAM CERTIFICATION OF APPROVAL

This is to certify that this plat has been reviewed and is in compliance with the Maury County E-911 Program.

_____, 20__ _____
(Date) E-911 Director

(8) Notation of Possible Flooding – If any portion of the land being subdivided is subject to flooding, as defined in these regulations, a notation shall be made on the plat that development or modification of the land within any floodway delineated on the plat is prohibited and that development within floodway fringes delineated on the plat shall be done in such a manner that any structure shall be protected against flood damage to at least the regulatory flood protection elevation, which elevation shall be stated in the notation. Any additional restrictions imposed by the Planning Commission upon development within flood-prone areas also shall be indicated on the plat.

(9) Notation of Health Restrictions – Any modifications or limitations which may be imposed by the State or County Health Department shall be clearly indicated on the plat.

(10) Notation of Private Restrictions – Private restrictions and trusteeships and their periods of existence shall be indicated on the plat. Should these restrictions or trusteeships be of such length as to make their lettering impracticable and, thus, necessitate the preparation of a separate instrument, reference to such instrument shall be made on the plat or, if the restrictions and trusteeships are of record, the plat shall note where they are recorded.

2-106 Signing and Recording of Subdivision Plat

2-106.1 Signing of Final Plat

(1) When a guarantee(s) in lieu of performance is required, the Secretary of the Planning Commission shall endorse approval on the Final Plat after the guarantee has been approved by the Planning Commission and after all the conditions of the resolution pertaining to the plat have been satisfied.

(2) When installation of improvements is required, the Secretary of the Planning Commission shall endorse approval on the Final Plat after all conditions of the resolution have been satisfied and all improvements satisfactorily completed. There shall be written evidence that the required public facilities have been installed in a manner satisfactory to the Legislative Body as shown on certifications by the appropriate governmental representative(s) that necessary land dedications and improvements have been accomplished.

(3) When the conditions of this section are satisfied, the Secretary shall sign the permanent reproducible original of the subdivision plat.

2-106.2 **Recording of Final Plat** -- It shall be the responsibility of the Enforcing Officer to record the plat with the County Register's office within ten (10) days of the date of signature of the Secretary of the Planning Commission; subject to the applicant providing all fees and costs for recording of all documents. The applicant shall also provide the fees for the Planning Commission's copies of recorded documents.

2-107 Miscellaneous Platting Situations

2-107.1 **Converting Parcels to Building Sites**. A land parcel created by deed or land parcel identified as a reserve parcel on a plat may be converted to a building site within the limits set forth by the Zoning Code and these regulations as follows:
(1) A deed parcel may be converted to a building site by the procedure described herein.

(2) Reserve parcels may be converted to building sites by submittal of a plat drawing as described herein. Removal of the reserve status shall require Planning Commission approval. An exception being when the parcel is in reserve pending an action by a public utility to provide service availability as noted on the face of the approved subdivision plat that created the reserve parcel.

2-107.2 **Combine Two or More Lots**. Any number of lots may be combined into an equal or lesser number of lots by submittal of a Final Plat drawing as described in herein. The drawing shall show the original lot lines as dash lines and proposed lot lines as solid lines. Combining lots shall require an approval by the Planning Commission. Any lots resulting from such recombination shall meet all applicable regulations. Administrative approval can be granted if easements, utilities or rights-of-way are not affected or required.

2-107.3 **Shifting Lot Lines**. Shifting of lot lines is subject to the same procedures as described herein.

2-107.4 **Dedication of Right-of-way, Public Use Lands, or Easements**. The dedication of land or use of land for public purposes may be accomplished by one of the following methods, both of which require Planning Commission approval:

(1) Dedication by Plat. A reproducible plat shall be prepared depicting the area to be dedicated by lines and survey description. The location of surrounding property lines, roads and public utilities shall be shown for reference. The placing of monuments and the location of such shall be shown on the plat. Signatory data shall also be included in the same manner as for a Final Plat. If the dedication is for a road right-of-way that, by the location of the dedication area, would divide a tract into two parcels, the plan shall be created as a final subdivision plat in conformance with these regulations.

(2) Dedication by Written Document (Deed or Instrument). A written document in a form acceptable to Maury County may be used for dedications in lieu of a plat. The document shall contain the following minimum information: (a) Statement of purpose, (b) A narrative survey description of the area to be dedicated, (c) Conditions, if any imposed by the Grantor, (d) the document shall contain the same signatory data as required for a final subdivision plat.

ARTICLE III

ASSURANCE FOR COMPLETION AND MAINTENANCE OF IMPROVEMENTS

3-101 Guarantee in Lieu of Improvements

3-101.1 **Completion of Improvements** -- Before the final subdivision plat is signed by the Planning Commission Officer specified in Section 2-106.1 of these Regulations, all applicants shall complete, in accordance with the Planning Commission's action and to the satisfaction of the appropriate governmental representative, all public way, access, sanitary, water system, stormwater drainage, stormwater management, erosion prevention & sediment control, re-vegetation, property monumentation and other improvements, including lot improvements on the individual lots of the subdivision, as required in these Regulations and approved by the Planning Commission, and shall dedicate such improvements to Maury County free and clear of all liens and encumbrances on the property and public improvements thus dedicated.

3-101.2 **Surety Instrument** -- The Planning Commission, at its discretion, may waive the requirement that the applicant complete and dedicate all public improvements prior to the signing of the final subdivision plat by providing that, as an alternative, the applicant post a guarantee in lieu of improvements at the time of submission for final subdivision plat approval in an amount estimated by the Planning Commission as sufficient to guarantee to Maury County the satisfactory construction, installation, and dedication of the uncompleted portion of required improvements (see Section 2-103.5).

Such guarantee in lieu of improvements shall comply with all statutory requirements and shall be satisfactory to Maury County's legal counsel as to form, sufficiency, and manner of execution, as set forth in these Regulations. The period within which required improvements must be completed shall be specified by the Planning Commission in the resolution approving the final subdivision plat and shall be incorporated in the guarantee in lieu of improvements and shall not exceed two (2) years from date of final plat approval without approval from the Planning Commission.

Such guarantee in lieu of improvements shall be approved by the Maury County Regional Planning Commission as to amount and conditions. The Planning Commission may, upon proof of difficulty, approve an extension of the completion date set forth in such guarantee in lieu of improvements for a maximum period of one additional year.

3-101.3 **Temporary Improvements** -- The applicant shall build and pay for all costs of temporary improvements required by the Planning Commission, and shall maintain them to a reasonable satisfaction for the period specified by the Planning Commission. Prior to construction of any temporary facility or improvement, the applicant shall file with the Planning Commission a separate suitable guarantee in lieu of improvements for temporary facilities, which shall ensure that the temporary facilities will be properly constructed, maintained, and removed.

3-101.4 **Costs of Improvements** -- All required improvements shall be made by the applicant at applicant's expense.

3-101.5 **Governmental Units** -- Governmental units to which these guarantee in lieu of improvements and contract provisions apply may file, in lieu of said contract or guarantee in lieu of improvements, a certified resolution or ordinance from officers or agencies authorized to act in their behalf agreeing to comply with the provisions of this ARTICLE.

3-101.6 **Failure to Complete Improvements** -- In subdivisions for which no guarantee in lieu of improvements has been posted, if the improvements are not completed within the period specified by the Planning Commission in the resolution approving the Final Plat, the approval shall be deemed to have expired. In those cases in which a guarantee in lieu of improvements has been posted and required improvements have not been installed within the terms of such guarantee in lieu of improvements, the Planning Commission thereupon may declare that the applicant is in default under the terms of the Performance and/or Maintenance Agreement and require that all the improvements be installed regardless of the extent of the building development at the time the guarantee in lieu of improvements is declared to be in default.

No Building Permit will be issued until completion of improvements or a performance security is provided to the satisfaction of the County.

3-101.7 **Acceptance of Dedication Offers** -- Acceptance of formal offers of dedication of public ways, easements, and parks shall be by formal action of Maury County. Such action shall be in the form of a resolution recommended by the Planning Commission to Maury County. The approval by the Planning Commission of a subdivision plat shall not be deemed to constitute or imply an acceptance by the local government of any public way, easement, or other property shown on the Final Plat as mandated by TCA Section 13-3-405. The Planning Commission may require the Final Plat to be endorsed with appropriate notes to this effect.

3-102 Inspection of Improvements

3-102.1 **General Procedure** -- The Planning Commission and/or County Road Superintendent may provide for and/or require inspection of required improvements during construction and ensure their satisfactory completion. If the appropriate governmental representative finds upon inspection that any of the required improvements have not been constructed in accordance with the Planning Commission's construction standards and specifications, the applicant shall be responsible for completing the improvements to the required standards. Whenever the cost of improvements, as covered by a guarantee in lieu of improvements are not satisfactorily completed, the Developer and the company securing the performance or maintenance security shall be liable, severally and jointly, for completing said improvements according to specifications.

The Applicant shall pay for or reimburse the County or respective utilities for costs associated with inspections related to the development. The fees or costs shall be as established by the County or utilities.

3-102.2 Release of Reduction of Guarantee in Lieu of Improvements

Certificate of Satisfactory Completion -- Maury County shall not accept dedication of required public improvements nor shall the Planning Commission release nor reduce a guarantee in lieu of improvements until the appropriate governmental representative submits a written statement stating that all required improvements have been satisfactorily completed, and until the applicant's engineer or surveyor has recommended to the Planning Commission and the appropriate governmental representative that the public improvements are in substantial accordance with the approved construction plans and any related requirements or conditions for the subdivision. Upon such approval and recommendation, Maury County, thereafter, may accept the dedicated improvements in accordance with the procedures set forth in these Regulations.

Reduction of Guarantee in Lieu of Improvements -- A Guarantee in Lieu of Improvements or performance security amount may be reduced upon demonstration of satisfactory completion of public improvements, that includes installation of the asphalt surface binder course, and then only to the ratio that the installed improvement bears to the total public improvements for the subdivision. In no event shall a performance security be reduced below 30 percent or $5,000.00, whichever is greater of the original principal amount of the Original Performance Security. No more than two reductions shall be considered by the Maury County Regional Planning Commission. The initial bond reduction shall be considered only after the asphalt surface binder is applied to the entire subdivision phase as platted.

The costs incurred in connection with the applicant's request for a reduction and/or extension to the time period of the Security amount, to include but not limited to engineering inspections, legal assistance, Road Superintendent fees, consultants for Maury County etc. shall be borne and paid for by the applicant, regardless if the request for reduction or time extension is granted. No reduction and/or extension to the time period for the Security shall be considered approved until all such costs have been paid. The Maury County Regional Planning Commission can draw draft or drafts on said Security for such costs as it may determine to be proper.

3-103 Maintenance of Improvements -- The applicant shall be required to maintain all improvements, including all lot improvements, until acceptance of the public improvements by Maury County.

The applicant will be required to file a Performance/Maintenance Agreement and the Performance/Maintenance Security with the Planning Commission prior to dedication, in an amount considered adequate by the appropriate governmental representative and in a form satisfactory to legal counsel, in order to assure that satisfactory condition of the required improvements, including all lot improvements, for a period of 1-year after the date of completion of the public improvements by the Planning Commission.

3-104 Deferral or Waiver of Required Improvements -- The Planning Commission may defer at the time of Final Plat approval, subject to appropriate conditions, the provision of any or all such improvements as, in its judgment, are not requisite in the interest of the public health, safety, and general welfare, or which are inappropriate because of inadequacy or lack of connecting facilities.

Whenever it is deemed necessary by the Planning Commission to defer the construction of any improvement required herein because of incompatible grades, future planning, inadequate or lack of connecting facilities, or for other reasons, the applicant shall either pay his share of the costs of the future improvements to the Planning Commission prior to signing of the final subdivision plat by the appropriate governmental representative(s) or post a bond or other surety instrument ensuring completion of said improvements upon demand of the Planning Commission.

3-105 Security Documents

3-105.1 **Performance and Maintenance Securities and Agreements** -- After the necessary information has been provided, the Performance Agreement or Maintenance Agreement will be prepared and sent to the applicant. The agreement is a legal document, which binds the applicant to the County and states that the applicant will install the public improvements and that if the applicant does not, then the County has the right, if necessary, to make demand for payment of the guarantee in lieu of improvement that is provided with the Agreement. The Agreements will be in a form and contain requirements and conditions that the applicant must accomplish.

3-105.2 **Security Documents** – The security or surety document shall be in the form of an Irrevocable Standby Letters of Credit or cashier's checks. Irrevocable Standby Letters of credit and cashier's checks are the ONLY surety accepted. All letters of credit are required to be a renewed automatically with no expiration date (sometimes referred to as evergreen). Letters of Credit will be sent to the County directly from the Bank. The Letter of Credit is subject to the "Uniform Customs and Practice for Documentary Credits" fixed by the International Chamber of Commerce applicable at the date of the issuance of the Letter of Credit.

3-105.3 **Letters of Credit** – If a letter of credit will be used to secure the agreement, a cover letter will be sent to the applicant stating the information, as it must appear on the letter of credit, such as beneficiary, amount, and any verbatim statements. Letters of credit must be issued by a bank with a branch located within the physical limits of Maury, Williamson and/or Davidson County, Tennessee, and the letter of credit must state that documents calling for payment of the letter of credit may be presented at a branch location in Maury, Williamson or Davidson County. If the issuing bank is not located within Maury, Williamson or Davidson County, Tennessee, it must have a reciprocal agreement with a bank located within Maury, Williamson and/or Davidson County, Tennessee, and the letter of credit must state that presentation of the documents calling for payment of the letter of credit may be made at that bank's location.

As stated above, all letters of credit are now required to be automatically renewed, with no expiration date, containing a clause that requires a minimum of sixty (60) days prior written notice from both the bank and the applicant, should the bank decide it does not intend to renew the letter of credit, delivered to the Planning Commission by overnight courier (or other delivery means such as certified mail that requires a recipient signature).

The expiration period and expiration date shall be set by the Planning Commission. The Planning Commission will consider setting the expiration date to be between April and November to facilitate the completion of paving.

The Planning Commission can call for the payment of the letter of credit 3-months before the expiration date.

3-105.4 **Cashiers Checks** – If a cashier's check is used to secure the agreement, the check shall be made payable to the Maury County, TN Government. The check will be deposited into a NON-INTEREST BEARING escrow account. If the performance agreement is reduced at a later time, the County will reimburse the applicant for the difference between the original performance agreement amount and the reduced performance agreement amount. When the performance agreement is released and placed under a maintenance agreement, the County will reimburse the applicant for the difference between the performance agreement amount and the maintenance agreement amount, once the fully executed maintenance agreement is returned to the Planning Commission. When the maintenance agreement is released, the County will reimburse the applicant for the maintenance agreement amount.

3-106 Issuance of Building Permits and Certificates of Occupancy

(1) Where a guarantee in lieu of improvements has been required for a subdivision, or any section of a subdivision, no certificate of occupancy for any building in the subdivision or section thereof shall be issued prior to the completion of the improvements as required in the Planning Commission's final approval of the subdivision plat.

(2) The extent of public road improvements shall be adequate for vehicular access by the prospective occupant and by police, school, emergency and fire equipment & vehicles prior to the issuance of an occupancy certificate.

(**3**) No building permit shall be issued for the final ten percent (10%) of lots based upon the Final Plat of subdivision or Final Plat of section of a subdivision, or if ten percent (10%) be less than two (2) lots, for the final two (2) lots of a subdivision, until all public improvements required by the Planning Commission's resolution of final plat approval have been fully completed, dedicated, and accepted by the Legislative Body.

3-107 Disposition of Liquidated Securities

Funds derived from liquidation of securities, as a result of Performance Agreement or Maintenance Agreement default, shall be used by the applicable Maury County Department or agency or utility to complete the required work. Project administration fees may be charged by the departments, agencies or utility against liquidated funds to offset actual personnel, materials, equipment costs, consultants or other items utilized in the accomplishment of required work. Any surplus funds shall be returned to the security provider after all charges and expenses are paid and required work is accepted.

ARTICLE IV

REQUIREMENTS FOR IMPROVEMENTS, RESERVATIONS AND DESIGN

4-101 General Requirements

4-101.1 **Conformance to Applicable Rules and Regulations** -- In addition to the requirements established herein, all subdivision plats shall comply with all applicable laws, ordinances, resolutions, rules, or regulations, including, but not limited to:

(1) All applicable provisions of Tennessee Law, regulations, or policy.

(2) Any zoning resolution, any building and housing codes, and all other applicable laws or policies of Maury County.

(3) The adopted General Plan and major road or street (public way) plan.

(4) The rules of the County and the Tennessee Department and Environment & Conservation.

(5) The rules, as applicable, of the Federal Highway Administration or Tennessee Department of Transportation, if the subdivision or any lot contained therein abuts a State or Federal highway.

(6) The standards and regulations adopted by all other boards, commissions, and agencies of Maury County, where applicable.

Plat approval may be withheld if a subdivision is not in conformity with the above rules or with the provisions set forth in Section 1-104 of these Regulations.

4-101.2 **Self-Imposed Restrictions** -- If the owner places restrictions on any of the land contained in the subdivision greater than those required by any zoning resolution or these Regulations, such restrictions or reference thereto shall be recorded with the County Register on a separate form. The Final Plat shall also make specific reference to any recorded by listed the Book & Page of said recorded document(s).

4-101.3 **Monuments** -- The applicant shall place permanent reference monuments in the subdivision as required herein and certified by a land surveyor licensed in Tennessee. Generally, subdivisions shall be surveyed and laid out based on a system of coordinates to reduce the number of monuments required and enhance future surveying within and adjacent to the subdivision. Such survey shall be tied to the Tennessee State Plane Coordinate System. The plat shall include reference locations and coordinates tied to the Tennessee State Plane Coordinate System.

a. All permanent reference concrete monuments shall conform to the Tennessee State Board of Registration for Land Surveyors Minimum Standards. The Planning Commission can determine the location of monuments that must be set.

b. In all major subdivisions, permanent concrete reference points shall be located and identified as follows:

i. A concrete monument shall be placed at corners along the external boundary of the subdivision.

ii. Concrete monuments shall be placed at locations as determined by the Registered Land Surveyor and in accordance with minimum standards that are established by the TN State Board of Registration for Land Surveyors.

iii. Additional concrete monuments may be required wherever necessary to maintain line-of-sight between monuments to ensure the capability to locate other points on the final plat or as determined to be necessary by the County.

iv. In cases where the 100-year floodplain encroaches on the property, permanent benchmark(s) shall be established and depicted upon the final plat. The number and location shall be coordinated with the Planning Commission Staff.

v. In minor subdivisions, concrete monuments shall be placed on a common line within this subdivision. Additional concrete monuments may be required wherever necessary to maintain line-of-sight between monuments to ensure the capability to locate other points on this final plat.

vi. All monuments and pins shall be properly set or re-set in the ground and approved by a Registered Land Surveyor prior to the time the Planning Commission recommends approval of the Final Plat or release of the guarantee where guarantee is made in lieu of improvements.

vii. The Registered Land Surveyor of record shall provide a written statement to the Planning Commission confirming the date(s) that the concrete monuments and other monumentation have been set.

4-101.4 **Character of the Land** -- Land which the Planning Commission finds to be unsuitable for subdivision or development due to flooding, improper drainage, steep slopes, rock or soil formations, adverse earth formations or topography, utility easements, mined land, inadequate road capacity, inadequate road geometry or other features which would be harmful to the safety, health, and general welfare of inhabitants of the land and surrounding areas shall not be subdivided or developed unless adequate methods are formulated by the applicant and approved by the Planning Commission, upon recommendation of any staff assistant serving the Planning Commission and/or other governmental representative, if any, to solve the problems created by the unsuitable land conditions. Such land shall be set aside for such uses as will not involve such a danger.

4-101.5 **Subdivision Name** -- The proposed name of the subdivision shall not duplicate or too closely approximate phonetically the name of any other subdivision within Maury County to include any municipality located within Maury County. The Planning Commission shall have final authority for the naming of the subdivisions which shall be determined at Concept Plan or Preliminary Plat approval. The Planning Commission will coordinate with

the Maury County E911 office. The developer shall provide written documentation that that subdivision name and road names are approved by the Maury County E911 office.

4-101.6 **Road Name--** The proposed name of the roads shall not duplicate or too closely approximate phonetically the name of any other road or street names within Maury County to include any municipality located within Maury County. The Planning Commission shall have final authority for the naming of the roads which shall be determined at Concept or Preliminary Plat approval. The Planning Commission will coordinate with the Maury County E911 office. The developer shall provide written documentation that that subdivision name and road names are approved by the Maury County E911 office.

4-102 Lot Requirements

The intent is to enhance and insure consistency within developments and the following purposes:

(1) To promote lots that are shaped in a manner to promote the convenient and harmonious development of the land.
(2) To prevent close proximity of narrow portions of lots that will create a situation that reduces privacy, increases congestion, increases overcrowding of the land and increase the confusion of delineating property lines.
(3) To prevent the close proximity of house sites that tend to create conflicts among the use of the land, including maintenance disputes, use disputes, and property ownership disputes between landowners.
(4) To prevent lot shapes that cannot reasonably be interpreted by the Planning Commission to be an orderly layout of the land or an aesthetic layout of land.
(5) To prevent lots that come to points or are deemed too narrow in the front of the lot.
(6) To prevent lots which are so distorted in configuration as to be detrimental to public health, safety, welfare or convenience, even though complying with the dimensional requirements established herein, shall not be permitted
(7) The size, shape, and orientation of lots shall be such as the Planning Commission deems appropriate for the type of development and use contemplated

4-102.1 **Lot Arrangement** -- The lot arrangement shall be such that there will be no foreseeable difficulties, for reasons of topography, mined land, subsurface sewage disposal, storm water management, flood hazards, or other conditions in securing building permits to build on all lots in compliance with any zoning resolution and state public health department regulations and in providing driveway access to buildings on such lots from an approved public way.

The Planning Commission may restrict, limit and/or define roadway and/or driveway locations.

For the purposes of future subdivision of land, the arrangement and design of lots shall be designed to provide a building envelope for each lot that is located outside of the 100-year floodplain or 100-year floodprone areas as identified by the latest date of the following: (a) U. S. Army Corps of Engineers Studies, (b) FEMA Flood Studies and maps, or (c) any other studies, evaluations, reports recognized and/or accepted by the Planning

Commission. The Planning Commission may determine the minimum size and configuration of the building envelope.

Where a lot in any flood-prone area must be improved to provide a building site free from flooding, such improvements shall be made outside the floodway by elevation or fill to at least 1-ft above the regulatory flood protection elevation (one hundred year flood) for a distance extending at least twenty-five (25) feet beyond the limits of intended structures. Additionally, the areas identified for subsurface sewage disposal shall be shown on documents submitted to the County to confirm that adequate soils disposal areas remain available and usable after any fill area is proposed. Any fill shall be protected against erosion by riprap, vegetative cover, or other methods deemed acceptable by the Planning Commission. The Planning Commission may determine what engineering, surveying, environmental and other studies and evaluations are necessary for their consideration of approving fills, cuts, disturbances and compensatory measures related to floodplain and floodprone areas.

4-102.2 **Lot Dimensions** -- Lot dimensions shall comply with the minimum standards required by the Maury County Zoning Resolution where applicable. Where lots are more than double the minimum area required by the zoning resolution, the Planning Commission may require that such lots be arranged so as to allow further subdivision and the opening of future public ways where they would be necessary to serve such potential lots, all in compliance with any Zoning Resolution and these Regulations.

In general, all side lot lines shall be at right angles to street lines (or radial to curving street lines) unless a variation will give a better street or lot plan.
A side lot line shall not form an angle of less than seventy-five (75) degrees with the street line or in the case where the side line of the street is a curving line, not less than seventy-five (75) degrees with the arc tangent to the curve of the street.

Flag or Irregular Shaped Lots. Residential flag lots or irregular shaped lots shall not be permitted except the Planning Commission may waive the requirement if it finds that, due to unusual conditions, limited area for lot frontage on a road is available. Should a Flag Lot be approved then the area within the narrow stem part of the lot shall not be counted as meeting the minimum required lot area.

Where subsurface sewage disposal systems (i.e., septic tanks, leach fields, LPP systems, etc.) are to be utilized, the provisions established by the County and the State shall be met as a condition of approval of the proposed subdivision.. Lots lines and lot shape shall not be distorted or narrowed such that a flag lot or irregular shaped lot is created for the purpose of providing soils disposal areas.

4-102.3 **Building Setback Lines** -- In the case of electric transmission lines where easement widths are not definitely established, a minimum building setback line from the center of the transmission line shall be established as follows:

Voltage of Line	Building Setback
46 KV	37 1/2 Feet
69 KV	50 Feet
161 KV	75 Feet

4-102.4 Double Frontage Lots and Access to Lots

Double Frontage Lots -- Double frontage lots shall be avoided except where necessary to provide separation of residential development from traffic arterials, or to overcome specific disadvantages of topography and orientation.

Access From Arterial or Collector Public Ways -- The Planning Commission may require that lots shall not derive access exclusively from arterial or collector public ways. Where driveway access from such public ways may be necessary for several adjoining lots, the Planning Commission may require that the lots be served by a combined access drive in order to limit possible traffic hazards. Driveways shall be designed and arranged so as to avoid requiring vehicles to back onto arterial or collector public ways.

4-102.5 Soil Preservation, Grading and Seeding

Soil Preservation and Final Grading -- A Certificate of Occupancy will not be issued until final grading has been completed in accordance with the approved construction plans.

The removal of topsoil shall be minimized to preserve the natural ground cover and to limit stormwater runoff. Topsoil that is removed shall be stockpiled for future use. Topsoil shall not be used as spoil. Stockpiled topsoil shall be redistributed so as to provide final ground cover and be stabilized by seeding, sodding or planting.

Lot Drainage -- Lots shall be laid out so as to provide positive drainage away from all buildings; individual lot drainage shall be coordinated with the general storm drainage pattern for the area.

4-102.6 Debris and Waste -- No cut trees, timber, debris, junk, rubbish, or other waste materials of any kind shall be buried in any land or left or deposited on any lot or public way at the time of the issuance of a Certificate of Occupancy for the lot, and removal of such waste shall be required prior to the issuance of any Certificate of Occupancy. Neither shall any such waste be left nor deposited in any area of the subdivision at the time of expiration of the guarantee in lieu of improvements or dedication of public improvements, whichever is sooner.

4-102.7 Fencing – The Planning Commission may require that fencing be installed by the applicant. The Planning Commission may determine location, material types and dimensions for the fencing.

4-102.8 .**Water Bodies and Watercourses** -- If a tract being subdivided contains a water body, or portion thereof, lot lines shall be so drawn as to distribute the entire ownership of the water body among the fees of adjacent lots. The Planning Commission may approve an alternative plan whereby the ownership of and responsibility for safe maintenance of the water body is so placed that it will not become a governmental responsibility.

No more than ten percent (10%) of the minimum area of a lot required under the Maury County Zoning Resolution may be satisfied by land which is under water. Where a watercourse separates a buildable area of a lot from

the public way by which it has access, provisions shall be made for installation of a culvert or other structure approved by the Planning Commission and no Certificate of Occupancy shall be issued for a structure on such a lot until the installation is completed and approved by the Planning Commission and/or the appropriate governmental representative.

4-103 Roads

4-103.1 General Requirements

Lot Access and Frontage -- No subdivision shall be approved unless the area to be subdivided shall have frontage on and access from either an existing road as noted on the Maury County, Tennessee Official Road List, except as provided in Section 1-111.107 of these Regulations or, if any new road construction or improvement is involved, a street approved and dedicated as provided in ARTICLES 2 and 3 of these Regulations. Any such public way must be suitably improved to standards required by this ARTICLE or be bonded by a guarantee in lieu of improvements required under these Regulations, with the roadway and right-of-way widths required by this ARTICLE or the major street or road plan. Where an existing publicly maintained road proposed as a means of legal access to a major subdivision is inadequate, the Planning Commission can require assurances for the necessary upgrading as a condition of plat approval.

Grading and Improvement Plan -- Public roads shall be graded and improved to conform to the standards required by these regulations and shall be approved as to design and specification by the appropriate governmental representative(s) in accordance with the specifications required herein. No surface shall be applied to the base of any proposed public road without having been properly inspected by appropriate governmental representative(s).

Topography and Arrangement:

(1) All public roads shall be properly integrated with the existing and proposed system of public roads and dedicated rights-of-way as established on the Major Road Plan or the General Plan.

(2) All public roads shall be properly related to special traffic generators, such as industries, business districts, schools, churches, and shopping areas or centers to population densities, and to the pattern of existing and proposed land use.

(3) Local public roads shall be laid out to conform as much as possible to the topography; to permit efficient drainage and utility systems; and to require the minimum ways necessary to provide convenient and safe access to property.

(4) The layout of roads shall facilitate the connectivity between existing roadways, existing subdivisions and proposed subdivisions. The planning Commission will require connectivity when deemed in the best interest to the public.

(5) Proposed public roads shall be extended to the boundary lines of the tract to be subdivided, unless prevented by topography or other physical conditions or unless, in the opinion of the Planning Commission, such extension is not necessary or desirable for the coordination of the subdivision design with the existing layout or the most advantageous future development of adjacent tracts. Connectivity to adjacent land or developments is encouraged and can be required by the Planning Commission.

(6) In business and industrial developments, public roads and other access routes shall be planned in connection with the grouping of buildings, location of rail facilities, and the provisions of alleys, truck loading and maneuvering areas, and walks and parking areas, so as to minimize conflict of movement between the various types of traffic, including pedestrian traffic.

Blocks

1. Blocks shall typically have sufficient width to provide for two (2) tiers of lots of appropriate depth.

2. The lengths, widths, and shapes of blocks shall be determined with due regard to:
    a. Provision of adequate building sites suitable to the special needs of the type of use proposed.
    b. Any zoning requirements as to lot sizes and dimensions.
    c. Needs for convenient access, circulation, control, and safety of vehicular and pedestrian traffic.
    d. Limitations and opportunities of topography.

3. The Planning Commission may require modifications to the lot layout.

4. The Planning Commission may require the reservation of an easement through the block to accommodate utilities, drainage, facilities, and/or pedestrian traffic.

5. A pedestrian walkway, not less than ten feet (10') wide, may be required by the Planning Commission through the approximate center of any block more than eight hundred feet (800') long, where deemed essential to provide circulation or access to a school, playground, shopping center, transportation facility, or other community facility.

Access to Arterials and Collectors --

Where a subdivision borders on or contains an existing or proposed arterial or collector route, the Planning Commission may require that access to such public road be limited by:

(1) the subdivision of lots so that the lots do not have vehicular access on the arterial or collector route. The lot may be permitted to front an arterial or collector route but vehicular access would be to the local road;

(2) The number of residential or local public roads entering on arterial or collector routes shall be kept to a minimum.

(3) Other layout or configuration deemed appropriate by the Planning Commission based on project specific considerations.

Reserve Strips -- The creation of reserve strips adjacent to a proposed public road in such a manner as to deny access from adjacent property to such public road shall generally not be permitted.

Arrangement of Continuing and Dead-End Public Roads

A. Arrangement of Continuing Public Roads -- The arrangement of public roads shall provide for the continuation of major public roads between adjacent properties when such continuation is necessary for convenient movement of traffic, effective fire, police & emergency protection, efficient provision of utilities, and when such continuation is in accordance with the major street or road plan. If the adjacent property is undeveloped and the public road must be a dead-end public road temporarily, the right-of-way shall be extended to the property line. A temporary cul-de-sac, temporary T-, or L-shaped turnabout shall be provided on all temporary dead-end public roads as a temporary easement with a notation on the subdivision plat that land outside the permanent public road right-of-way and within the temporary easement shall revert to abutting property owners whenever the public road is continued.

The Planning Commission may limit the length of temporary dead-end public ways in accordance with the design standards of these Regulations.

B. Dead-End Public Roads - Where a public road does not extend beyond the boundary of the subdivision and its continuation is not required by the Planning Commission for access to adjoining property, its terminus shall normally not be closer to such boundary than fifty feet (50'). However, the Planning Commission may require the reservation of an appropriate easement to accommodate drainage facilities, pedestrian traffic, or utilities. A cul-de-sac turnabout shall be provided at the end of a dead-end public road in accordance with the design standards of these Regulations.

For greater convenience to traffic and more effective police and fire protection, permanent dead-end public roads shall, in general, be limited in length in accordance with the design standards of these Regulations.

4-103.2 Design Standards --

Purpose - In order to provide public roads of suitable location, width, and improvement to accommodate prospective traffic and afford satisfactory access for law enforcement, fire-fighting, emergency vehicles, school vehicles, utilities, sanitation, and road maintenance equipment, and to coordinate public roads so as to compose a convenient and safe system and avoid undue hardships to adjoining properties, the public road design standards set forth in these regulations to include Appendix A- Roadway and

Drainage Technical Standards are hereby required. (Public road classification shall be as indicated on the General Plan and/or major road plan; otherwise, the public road shall be classified by the Planning Commission.)

General Design - The general design of all public roads shall conform to the standards in these regulations to include Appendix A- Roadway and Drainage Technical Standards.

Excess Right-of-Way -- A slope easement in excess of the right-of-way designated in these Regulations may be required whenever, due to topography, additional width is necessary to provide adequate earth slopes. Such slopes shall not be less than three (3) to one (1). Where solid rock is encountered, slopes of one-half (1/2) to one (1) will be considered by the Planning Commission.

Railroads and Limited Access Highways -- Railroad rights-of-way and limited access highways, where so located as to affect the subdivision of adjoining lands, shall be treated as follows:

(1) In residential areas, a buffer strip at least twenty-five feet (25') in depth, in addition to the normally required depth of the lot, may be required adjacent to the railroad right-of-way or limited access highway. This strip shall be part of the platted lots and shall be designated on the plat: "This strip is reserved for screening; the placement of structures hereon is prohibited."

(2) In commercial or industrial areas, the nearest public road extending parallel or approximately parallel to the railroad shall, wherever practicable, be at a sufficient distance therefrom to ensure suitable depth for commercial or industrial sites.

(3) Public roads parallel to a railroad, when intersecting a public road which crosses the railroad at grade, shall to the extent practicable, be at a distance of at least one hundred fifty feet (150') from the railroad right-of-way. Such distance shall be determined with due consideration of the minimum distance required for future separation of grades by means of appropriate approach gradients.

Bridges -- Bridges of primary benefit to the applicant, as determined by the Planning Commission, shall be constructed at the full expense of the applicant without reimbursement from Maury County. The sharing of expenses for the construction of bridges not of primary benefit to the applicant, as determined by the Planning Commission, shall be fixed by special agreement between the Legislative Body and the applicant. The cost shall be charged to the applicant pro rata as to the percentage of the applicant's development so served.

4-103.3 **Right-of-Way Width Dedication on Existing Public Ways** -- Where a subdivision adjoins an existing narrow public road or where the major street or road plan or any zoning setback provisions indicate plans for realignment or widening of a public road that would require use of some of the land in the

subdivision, the applicant shall be required to dedicate, at his expense, areas for widening or realigning such public road as set forth below:

(1) the entire right-of-way shall be provided where any part of the subdivision is on both sides of the existing public road; or,

(2) when the subdivision is located on only one side of an existing public road, one-half of the required right-of-way, measured from the center line of the existing pavement, shall be provided.

4-103.4 **Public Road Surfacing and Improvements** -- After underground utilities have been installed, the applicant shall construct curb or curbs with gutters, where required, and shall surface or cause to be surfaced public roads to the widths prescribed in these Regulations. No public road shall have the final asphalt surface course constructed until final approval of the subdivision Final Plat has been obtained. Surfacing shall be of such character as is suitable for the expected traffic.

All public road pavements, shoulders, drainage improvements and structures, any curb returns and sidewalks shall conform to all construction standards and specifications adopted by the Planning Commission and shall be incorporated into the construction plans required to be submitted by the applicant for plat approval.

4-104 **Road Construction Specifications** -- The road construction specifications are included in these Regulations to include Appendix A- Roadway and Drainage Technical Standards, and are adopted as a part hereof. These specifications shall be the minimum standards for any subdivision within the jurisdictional area.

4-105 **Drainage and Storm Sewers**

4-105.1 **General Requirements** -- The Planning Commission shall not approve any plat of a subdivision which does not make adequate provisions for stormwater or floodwater runoff channels or basins. The stormwater drainage system shall be separate and independent from any sanitary sewer system.

4-105.2 **Nature of Stormwater Facilities**

Location - The applicant may be required by the Planning Commission to transport by pipe or open ditch any spring or surface water that may exist either prior to or as a result of the subdivision. Such drainage facilities shall be located in the public road right-of-way, where feasible, or in perpetual unobstructed easements or appropriate width and shall be constructed in accordance with the construction specifications contained in these Regulations.

Accessibility to Public Storm Sewers

(1) Where a public storm sewer is accessible, the applicant shall install storm sewer facilities, or if no outlets are within a reasonable distance, adequate provision shall be made for the disposal of storm waters, subject to the specifications of the appropriate governmental

representative(s); inspection of facilities shall be conducted to assure compliance. Inspection of facilities shall be conducted by the Enforcing Officer.

(2) If a connection to a public storm sewer will be provided eventually, as determined by the Planning Commission, the applicant shall make arrangements for future stormwater disposal by a public system at the time the plat receives final approval. Provision for such connection shall be incorporated by inclusion in the guarantee in-lieu-of improvements required for the final subdivision plat.

Accommodation of Upstream Drainage Areas -- A culvert or other drainage facility shall, in each case, be large enough to accommodate potential runoff from its entire upstream drainage area, whether inside or outside the subdivision. Necessary facilities shall be sized based on the construction specifications and assuming conditions of maximum potential watershed development permitted by the Zoning Resolution.

Effect on Downstream Drainage Areas -- The Applicant shall study the effect of each subdivision on existing downstream drainage facilities outside the area of the subdivision. The Applicant shall submit reports prepared by a registered civil engineer as part of their application. Where it is anticipated that the additional runoff incident to the development of the subdivision will overload an existing downstream drainage facility, the Planning Commission may withhold approval of the subdivision until provision has been made for adequate improvement of such drainage facilities to the extent as determined by the Planning Commission. No subdivision shall be approved unless adequate drainage will be provided to an adequate drainage watercourse or facility.

Areas of Poor Drainage -- Whenever a plat is submitted for an area which is subject to flooding, the Planning Commission may approve such subdivision, provided that the applicant fills the affected floodway fringe area of said subdivision such that public road elevations are no more than 1-foot below the regulatory flood elevation and first floor elevations (including basements) at no less than 3-ft above the regulatory flood elevation unless otherwise required by the Zoning Resolution. The Planning Commission may also require areas of compensatory excavation to compensate for the fill placed in the floodway fringe area. The plat of such subdivision shall provide for a floodway along the bank of any stream or watercourse of width sufficient to contain or move the water of the regulatory flood, and no fill shall be placed in the floodway; neither shall any building nor flood-restrictive structure be erected or placed therein. The boundaries of the floodway and floodway fringe area, and the regulatory flood elevation, shall be determined by the Planning Commission based upon the review specified in these Regulations and the submission of flood data in construction plans as specified in these Regulations.

4-105.3 Dedication of Drainage Easements

General Requirements -- Where a subdivision is traversed by a watercourse, drainage way, channel, or stream, there shall be provided a stormwater easement or drainage right-of-way conforming substantially to the lines of such watercourse and of such width and construction as will be

adequate. Where open drainage ways are utilized, they shall be designed for the twenty-five (25) year frequency flood and checked for the 100-yr. event.

Drainage Easements

(1) Where topography or other conditions are such as to make impractical the inclusion of drainage facilities within a public way right-of-way, perpetual unobstructed easements at least ten (10') feet in width for such facilities shall be provided across property outside the public way lines and with satisfactory access to public ways. Easements shall be indicated on the preliminary and final plats. Drainage easements shall be carried from the public way to a natural watercourse or to other drainage facilities.

(2) When a new drainage system is to be constructed which will carry water across private land outside the subdivision, appropriate drainage rights must be secured and indicated on the plat. Likewise the Applicant shall justify that the discharge point for concentrated flows are appropriate. The Applicant's registered civil engineer shall provide within a report the justification for these discharge points. Adjacent property owners shall be contacted by the Applicant.

(3) The applicant shall dedicate, when required by and deemed appropriate by the Planning Commission, either in fee simple, or by drainage or conservation easement, the land on both sides of existing watercourse to a distance to be determined by the Planning Commission.

(4) Along watercourses, low-lying lands within any floodway, as determined by the Planning Commission pursuant to Section 2-103 of these Regulations, whether or not included in areas for dedication, shall be preserved and retained in their natural state as drainage ways.

Ditching, Concrete Ditch Paving, and Culverts and Storm Drains -- The design and construction details of drainage facilities shall be in accordance with the provisions of these Regulations. The design and construction details of all such facilities shall be approved by the appropriate governmental representative.

4-106 Water Facilities

4-106.1 General Requirements

(1) No subdivision shall be approved until provisions are made for an adequate water supply for domestic use. Necessary action shall be taken by the applicant to extend a water supply system capable of providing domestic water use and fire protection as required by these provisions and the local water provider.

(2) Where a public water main is within reasonable access of the subdivision, as determined by the Planning Commission, the applicant shall install adequate water facilities. This is to include installation of fire hydrants where required by these provisions or provisions of the local utility provider and only if the water system can deliver the water flow and water pressure to a fire hydrant, 500-gpm at 20-psi residual pressure, unless otherwise required by the Tennessee Department of

Environment & Conservation. All public water facilities shall be approved by the local water utility and the appropriate State authorities.

(3) Where required for fire protection water mains shall not be less than 8 inches in diameter. Where water mains are not to be utilized for fire protection, the Planning Commission may approve smaller lines, as necessary, to meet potable water demand.

(4) Where public water is available, the responsible utility must provide a letter stating the availability of water to serve the subdivision.

(5) Water pumping facilities and water treatment facilities, whether public or private, located in a flood-prone area, shall be flood-proofed to the regulatory flood protection elevation. All water supply facilities located below the regulatory flood protection elevation shall be designed to prevent the infiltration of floodwaters into the water supply system and discharges from the system into floodwaters.

4-106.2 <u>Water Service Criteria:</u>

(1) Within residential subdivisions where all lots are 5 acres or larger and the separation of dwellings is 200 feet or greater, water service may be by either wells or public supply. In any instance where a public supply is provided, the source and delivery system shall be adequate to support maximum domestic consumption within the subdivision. Water service adequate to provide fire protection is not required within developments subject to this provision.

(2) Within all other residential subdivisions, excepting those permitted under the Administratively Approved plat provisions of these Regulations, and within all commercial and industrial subdivisions, water service shall be required herein. All water line extensions and improvements shall be as shown on the plan of subdivision and shall be accompanied by hydraulic design data meeting the following minimum criteria:

(a) Present and anticipated future demands for both domestic and fire protection must be taken into consideration. Distribution main sizes must conform to any water system improvement plans adopted by the utility providing water service to the development.

(b) Distribution mains must be designed to carry maximum instantaneous water demand.

(c) A minimum residual pressure of twenty (20) pounds per square inch at the meter is required for the distribution system or greater as required by TDEC or the local water utility.

(d) All requirements of the local water utility and TDEC shall be met.

4-106.3 <u>Fire Protection</u> –

The Applicant/Developer shall accomplish the following:

a) If the water system **<u>cannot</u>** support the installation of fire hydrants, then the applicant shall install "stub-out" fittings, appurtenances and valves as required by the fire hydrant location provisions herein and the local utility provider.

b) If the water system **<u>can</u>** support the installation of fire hydrants, then the applicant shall install them such that they shall be located no more than one thousand (1,000') feet apart and be within five hundred (500') feet of any residential, commercial, or industrial lot. However, the Planning Commission may require closer spacing where physical conditions or types of structures so warrant.

c) To eliminate future public way cuttings or openings, all underground utilities for water facilities and fire hydrants, together with the fire hydrants themselves, shall be installed before any final paving of a public way shown on the subdivision plat, unless otherwise approved by the Planning Commission.

4-107 <u>Sewage Facilities</u>

4-107.1 <u>General Requirements</u> -- Where public sewers are determined by the Planning Commission to be available, the applicant shall install such in a manner prescribed the regulations of the Tennessee Department of Environment and Conservation and by any other applicable standards and specifications. All plans shall be designed and approved in accordance with the rules, regulations, specifications, and standards of any applicable governmental agency or appropriate unit thereof.

4-107.2 <u>Mandatory Connection to Public Sewer System</u>

(1) When public sanitary sewers are within reasonable access of the subdivision, as determined by the Planning Commission, the applicant shall provide sanitary sewer facilities to each lot therein and shall connect these facilities to the public system. The applicant shall provide sewers which meet standards set forth in the regulations of the Tennessee Department of Environment and Conservation.

(2) All sanitary sewer facilities located in a flood hazard area shall be flood-proofed to the regulatory flood protection elevation. All sewer facilities located below the regulatory flood protection elevation shall be designed to prevent infiltration of floodwaters into the sewer system and discharges from the system into floodwaters.

4-107.3 <u>Individual Disposal System Requirements</u> -- If public sewer facilities are not available and individual disposal systems are proposed to be located on each lot, the lot areas shall be as required to meet the needs for sewage disposal as specified by the Tennessee Department of Environment and Conservation. All pertinent soils analysis and tests shall be made as directed

by the Tennessee Department of Environment and Conservation, and the results submitted to the Planning Commission as part of the approval process.

The individual disposal system, including the size of the septic tank and size of the leach fields or other secondary treatment device, also shall be approved by the Tennessee Department of Environment and Conservation.

The Planning Commission may prohibit installation of sewage disposal facilities requiring soil absorption systems where such systems will not function due to high groundwater, flooding, or unsuitable soil characteristics. The Planning Commission may require that the applicant note on the face of the plat and any deed of conveyance that soil absorption fields are prohibited in designated areas.

All septic systems, on-site subsurface disposal fields and appurtances will be located on the lot served and WILL NOT be located in an easement on another lot or tract.

If a proposed subdivision includes an existing lot or existing home as part of property to be subdivided, the on-site sewage disposal system shall be re-evaluated to meet the current standards of the Planning Commission and TDEC. A written certification from TDEC shall be required and state that the existing system meets current standards or an action plan to provide an acceptable system on the existing lot.

4-107.4 Design Criteria for Sanitary Sewers

General -- These design criteria are not intended to cover extraordinary situations. Deviations can be allowed and may be required in those instances where considered justified by the Planning Commission.

Sanitary Sewerage Facilities

1. General Requirements

a. No subdivision shall be approved until provisions are made for the adequate disposal of wastewater from the site.

b. All on-site waste disposal systems shall be approved by the Tennessee Department of Environment and Conservation (TDEC). The criteria for approval of on-site waste disposal systems shall be in accordance with the rules and regulations of Maury County and TDEC. The standards contained in the Zoning Resolution of Maury County shall also apply.

c. All lots approved solely with on-site disposal systems shall have minimum disposal areas as determined by the TDEC, whichever is greater.

d. All public sanitary sewer facilities shall be approved by the respective sewer utility and the appropriate State authorities.

2. Provision of Sanitary Sewers

Once the Planning Commission determines that a proposed subdivision is in an area where public sewer service is planned, no subdivision shall be approved until the sewer requirement is satisfied.

When adequate connecting facilities are reasonably accessible, the installation of sewers within the subdivision and connection to a system shall be required. When considering whether public sewer facilities are reasonably accessible, the following criteria are to be considered:

a.The governmental entity or utility company providing sewer service must issue written intent to service this subdivision; and

b.Unless otherwise waived by the Planning Commission, sewer service shall be considered reasonably available if any part of the proposed subdivision is within 1,000 feet of public sewer, and if the routing of such sewer can occur via natural drainage or other acceptable routing.

3. Standards and Dedications
All public sewer facilities shall be constructed to the standards and specifications adopted by the Tennessee Department of Environmental and Conservation, the respective utility and Maury County. All such facilities shall be dedicated to the appropriate entity. Public sewers shall include a service connection for each lot at the property line.

4-108 Pedestrian Ways

4-108.1 **Sidewalks and Bicycle Paths** -- Sidewalks and bicycle paths may be required by the Planning Commission or may be provided as planned by the applicant. Concrete curbs are required for all public roads where sidewalks are to be constructed. A median strip of grassed or landscaped area at least two (2') feet wide shall separate all sidewalks from adjacent curbs.

4-108.2 **Pedestrian Accesses** -- The Planning Commission may require pedestrian access from public or private roads to schools, parks, playgrounds, or other nearby public roads. A perpetual unobstructed easement at least twenty (20') feet in width shall be provided. Easements shall be indicated on the Final Plat.

4-109 Utility Easements

(1) Easements located along rear lot lines or additionally across lots, if deemed necessary by the Planning Commission, shall be provided for utilities (private or public). Such easements shall be at least ten (10') feet wide except for cross-lot easements which shall be at least twenty (20') feet wide. The applicant shall take such actions as are necessary to ensure the coordination and continuation of utility easements established on adjacent properties with those proposed within the applicant’s development.

(2) Where topographical or other conditions are such as to make impractical the inclusion of utilities within rear lot lines, perpetual unobstructed easements at least ten (10') feet in width shall be provided along side lot lines with satisfactory access to public roads or rear lot lines. Easements shall be indicated on the plat.

(3) Temporary construction easements exceeding the width of permanent easements may be required as necessary until completion of any one project.

4-110 Public Uses

4-110.1 **Plat to Provide for Public Uses** -- Whenever a tract to be subdivided includes a school, recreation use, a portion of a major public way, or other public use, as indicated on the Major Road Plan, or any portion thereof, such tract shall be suitably incorporated by the applicant into the applicant's plat when first presented for review by the Planning Commission.

After determination of its necessity by the Planning Commission and the appropriate Governmental Representative(s) involved in the acquisition and use of such site, and after a determination has been made to acquire the site by the public agency, the site shall be suitably incorporated by the applicant into the plat prior to final approval by the Planning Commission and recording of the plat.

4-110.2 **Referral to the Governmental Agency Concerned** -- The Planning Commission shall refer any plat presented in accordance with Section 4-110.1. The Planning Commission may propose alternate areas for such acquisition

Among the areas which the Planning Commission may propose for public acquisition, when the Planning Commission deems it appropriate and consistent with the policies and purposes set forth in these regulations, is any land within a floodway or floodway fringe determined according to the procedure outlined herein.

The acquiring agency's recommendation, if affirmative, shall include a map showing the boundaries and area of the parcel to be acquired and an estimate of the time required to complete the acquisition.

4-110.3 **Notice to Property Owner** -- Upon receipt of an affirmative report, the Planning Commission shall notify the property owner and shall designate on all plats any areas proposed to be acquired by any governmental agency. Upon such designation by the Planning Commission, any reserved portion of any floodway or floodway fringe shall not be altered from its natural state by the applicant in any manner whatsoever, except upon written approval of the Planning Commission.

4-110.4 **Duration of Land Reservation** -- The acquisition of land reserved by a governmental agency on the final plat shall be initiated within twenty-four (24) months of notification, in writing, from the owner that he intends to develop the land. Such letter of intent shall be accompanied by a plat, of a proposed development and a tentative schedule of construction. Failure on the part of the governmental agency to initiate acquisition within the

prescribed twenty-four (24) months shall result in the removal of the "reserved" designation from the property involved and the freeing of the property for development in accordance with these regulations.

4-111 **Preservation of Natural Features and Amenities** -- Existing features which would add value to residential development or to the area as a whole, such as trees, tree masses, watercourses and falls, historic sites or structures, and similar irreplaceable assets, shall be preserved in the design of the subdivision, as required by the Planning Commission. These features not only add value, but potentially contribute to erosion prevention, sediment control, stormwater management, protection of water quality & water quantity and flood abatement. No change of grade of the land shall be effected nor shall any natural features be removed or relocated until a Preliminary Plat and Construction Plans have been approved..

4-112 **Non-Residential Subdivisions**

4-112.1 **General** -- If a proposed subdivision includes land which is zoned for a commercial or industrial purpose, the layout of the subdivision with respect to such land shall make such provisions as the Planning Commission may require. A nonresidential subdivision also shall be subject to all the requirements of site plan approval set forth in any zoning resolution. Site plan approval may proceed simultaneously at the discretion of the Planning Commission. A nonresidential subdivision shall be subject to all the requirements of these regulations, as well as such additional standards set forth by the Planning Commission, and shall conform to the proposed General Plan, major street or road plan, and any zoning resolution.

4-112.2 **Standards** -- In addition to the principles and standards in the Regulations, which are appropriate to the planning of all subdivisions, the applicant shall demonstrate to the satisfaction of the Planning Commission that the public road, parcel, and block pattern proposed is specifically adapted to the uses anticipated and takes into account other uses in the vicinity. The following principles and standards shall be observed:

(1) Proposed industrial parcels shall be suitable in areas and dimensions to the types of industrial development anticipated.
(2) Public road rights-of-way and pavements shall be adequate to accommodate the type and volume of traffic anticipated.
(3) Special requirements may be imposed by the Planning Commission with respect to any public road, curb, gutter, and sidewalk design and construction specifications.
(4) Special requirements may be imposed by the Planning Commission with respect to the installation of public utilities, including water, sewer, and stormwater drainage.
(5) Every effort shall be made to protect adjacent residential areas from potential nuisance from the proposed nonresidential subdivision, including the provision of extra depth in parcels backing on existing or potential residential development and provisions for permanently landscaped buffer strips, when necessary.
(6) Public roads carrying nonresidential traffic, especially truck, normally shall not be extended to the boundaries of adjacent existing or potential residential areas.

ARTICLE V
FLOOD PRONE AREAS

5-101 **Policy on Flood-Prone Areas** -- In determining the appropriateness of land subdivision at any site containing a flood-prone area, the Planning Commission, in reviewing any plat, shall consider the Policy and Purpose as set forth in Section 1-104 of these Regulations, the Maury County Zoning Resolution and, additionally:

(1) The danger to life and property due to the increased flood heights or velocities, either potential or actual, caused by subdivision fill, roads, and intended uses.

(2) The danger that intended uses or improvements may be swept onto other lands or downstream to the injury of others.

(3) The adequacy of proposed water supply, sanitation, and drainage systems, and the ability of these systems to function under flood conditions.

(4) The susceptibility of the proposed facility and its contents to flood damage and the effect of such damage upon the individual owner.

(5) The importance of the services provided by the proposed facility to the community at large.

(6) The requirements of the subdivision for a waterfront location.

(7) The availability of alternative locations not subject to flooding for the proposed subdivision and land uses.

(8) The compatibility of the proposed uses with existing development or developments anticipated in the foreseeable future.

(9) The relationship of the proposed subdivision to the General Plan and the Floodplain Management Program for the area.

(10) The safety of access to the property for emergency vehicles in times of flood.

(11) The expected heights, duration, velocity, rate of rise, and sediment transport of the floodwaters expected to the site.

(12) The costs of providing governmental services during and after flood conditions, including maintenance and repair of public utilities and facilities such as sewer, gas, electrical, solid waste and water systems, public ways, and bridges.

(13) The effect of the proposed subdivision upon Maury County's participation in the National Flood Insurance Program, if such Legislative Body is, or elects to be, in the program.

(14) No subdivision or part thereof shall be approved by the Planning Commission if proposed subdivision levees, fills, structures, or other

features will individually or collectively, increase flood flows, heights, duration, or damages. The regulatory limits (referred to as the one hundred year flood level) shall be determined from the latest approved flood study for the jurisdictional area, and any subsequent revisions thereto. Specific engineering studies are to be provided by the applicant as deemed necessary by the Planning Commission.

In any instance in which the Planning Commission determines that a proposed subdivision may affect the flood height, velocity, or duration in any flood-prone area outside its jurisdiction, the Planning Commission shall take all actions necessary and proper to ensure the coordinated review of the development with the appropriate governmental agencies of the affected area.

In approving plans for subdivision of land containing flood-prone areas, the Planning Commission shall ensure that development will proceed in such a way that property lying within any floodway, as defined by these Regulations, will be maintained in a manner as prescribed by any zoning resolution. The Planning Commission shall also ensure that development within any floodway fringe area (within the one hundred year flood level) will be protected adequately against potential flood hazards by the methods prescribed in ARTICLE IV of these Regulations.

The Planning Commission shall disapprove the subdivision of any land containing a flood-prone area when the Planning Commission determines that subdivision plans are not consistent with the policy stated in this section.

5-102 **Flood-Damage Protection** Where protection against flood damage is necessary, in the opinion of the Planning Commission, flood-damage protection techniques shall include but not be limited to, those techniques as deemed appropriate by the County and as further set forth in the Maury County Zoning Resolution.

(1) The imposition of any surety and deed restrictions enforceable by Maury County to regulate the future type and design of uses within flood-prone areas.

(2) Flood-protection measures designed so as not to increase, either individually or collectively, flood flows, height, duration, or damages, and so not to infringe upon the regulatory floodway.

(3) Installation of flood warning systems.

(4) The use of fill, dikes, levees, and other protective measures.

(5) The use of flood proofing measures, which may include:

(a) Anchorage to resist flotation and lateral movement.

(b) Installation of watertight doors, bulkheads, shutters, or other similar methods of closure.

(c) Reinforcement of walls to resist water pressures.

(d) Use of paints, membranes, or mortars to reduce seepage through walls.

(e) Addition of mass or weight to structures to resist flotation.

(f) Installation of pumps to lower water levels in structures.

(g) Construction of water supply and waste treatment systems so as to prevent the entrance of or contamination of flood waters.

(h) Installation of pumps or comparable facilities for subsurface drainage systems to relieve external foundation wall and basement flood pressures.

(i) Building design and construction to resist rupture or collapse caused by water pressure of floating debris.

(j) Installation of valves or controls on sanitary and storm drains which permit the drains to be closed to prevent backup of sewage or stormwater into buildings or structures.

(k) Location and installation of all electrical equipment, circuits, and appliances so that they are protected from inundation by the Regulatory Flood.

(l) Location of storage facilities for chemicals, explosives, buoyant material, flammable liquids, or other toxic materials which would be hazardous to the public health, safety, and welfare at or above the regulatory flood protection elevation, or design of such facilities to prevent flotation of storage containers or damage to storage containers which could result in the escape of toxic materials.

The acceptability of any flood-protection methods formulated by the applicant or his agent shall be initially determined by the Planning Commission, which shall be guided by the policies set forth in Sections 1-104 and 2-101.4 of these Regulations. Additional measures will be required by the County prior to issuing building or land disturbance permits.

5-103 **Floodplain Areas** -- The Planning Commission, when it deems it necessary for the health, safety, or welfare of the present and future population of the area or if necessary for the conservation of water, drainage, and sanitary facilities, may prohibit the subdivision of any portion of the property which lies within the floodplain of any stream or drainage course. The Regulatory Floodway shall be preserved from destruction or damage resulting from clearing, grading, or dumping of soil or rock, waste material, or other fill. Any subdivision which contains flood-prone land shall be subject to the special provisions set forth in these Regulations and the Zoning Resolution.

5-104 **Improvements in Floodable Areas** -- The finished elevation of proposed public roads subject to flood shall not be below the regulatory flood protection elevation. The Planning Commission may require profiles and elevations of public roads to determine compliance with this requirement. All drainage structures shall be sufficient to discharge flood flows without increasing flood height. Where fill is used to bring the finished elevation of any public road to the required elevation, such fill shall not encroach upon a floodway, and the fill shall be protected against erosion by riprap, vegetative cover, or other methods deemed acceptable by the Planning Commission.

ARTICLE VI

DEFINITIONS

6-101 Usage

(1) For the purpose of these regulations certain numbers, abbreviations, terms, and words used herein shall be used, interpreted, and defined as set forth in this ARTICLE.

(2) Unless the context clearly indicates to the contrary, words used in the present tense include the future tense, and words used in the plural include the singular; the word "herein" means "in these regulations"; and the word "regulations" means "these regulations".

(3) A "person" includes a corporation, a partnership, and an unincorporated association of persons, such as a club; "shall" is always mandatory; a "building" or "structure" includes any part thereof; "used" or "occupied", as applied to any land or building shall be construed to include "intended, arranged, or designed to be used or occupied".

6-102 Words and Terms Defined

Alley – A right-of-way primarily designed to serve as secondary access to the side or rear of properties whose principal frontage abuts another road, and which may be used for utility and other service purposes.

Administratively Approved Subdivision – Any subdivision containing not more than two (2) lots fronting on an existing public way; not involving any new or improved public way, the extension of public facilities, or the creation of any public improvements, and not in conflict with any provision of the adopted General Plan, Major Road Plan, Zoning Ordinance, or these regulations.

Applicant – The owner of land proposed to be subdivided or his authorized representative. Written consent shall be required from the legal owner of the premise(s) to grant authority to the owner's authorized agent or representative.

Architect – An architect certified and registered by the State Board of Architectural and Engineer Examiners pursuant to Section 62-202, Tennessee Code Annotated, to practice in Tennessee; or a landscape architect certified and licensed by the State Board of Landscape Architects pursuant to Section 62-203, Tennessee Code Annotated, to practice in Tennessee.

Arterial Street or Road – A major public way intended to move traffic to and from major industrial areas or a route for traffic between communities or large areas and which has an average daily traffic count in excess of 3,000.

Base Flood - means the flood having a one percent chance of being equaled or exceeded in any given year. This term is also referred to as the 100-year flood or the one (1)-percent annual chance flood.

Block – A tract of land bounded by public ways or by a public park, cemetery, railroad rights-of-way, or shoreline or waterway or a combination of such.

Bond – An instrument with a clause, with a sum of money fixed as a penalty, binding the parties to pay the same, conditioned, however, that the payment of the penalty may be avoided by the performance by some one or more of the parties of certain actions.

Building – Any structure built for the support, shelter, or enclosure of persons, animals, chattels, or movable property of any kind; the term includes a mobile home.

Capital Improvements Program – A proposed schedule of future projects, listed in order of construction priority, together with cost estimates and the anticipated means of financing each project. All major projects requiring the expenditure of public funds, over and above the annual local government operating expenses, for the purchase, construction, or replacement of the physical assets of the community are included.

Collector Street or Road – A major public way intended to move traffic from local way to arterial routes. Collector routes serve a neighborhood or large subdivision(s), and normally have an average daily traffic count ranging from 1,001 to 3,000.

Common Elements – Any portion of a condominium which is held in common by owners of condominium units. These elements may be either general common elements or limited common elements, as defined below:

> **General Common Elements** – Any of the common elements of a condominium which are held in joint ownership by all owners of the condominium.
>
> **Limited Common Elements** – Any of the common elements of a condominium which are reserved for use by the owner of a particular condominium unit or group of units.

Condominium – A form of ownership of less than the whole of a building or system of buildings under a statute which provides the mechanics and facilities for formal filing and recordation of divided interests in real property, whether the division is vertical or horizontal.

Condominium Subdivision – The subdivision of a property through the establishment of a condominium or horizontal property regime.

Condominium Unit – A space conveyed by separate title and located within a condominium structure.

Construction Plan – the maps or drawings accompanying a subdivision plat and showing the specific location and design of improvements to be installed in the subdivision in accordance with the requirements of the Planning Commission.

Contractor – An individual, firm, or corporation with whom an owner or authorized agent has executed a work agreement.

TDEC Environmentalist – An agent designated to administer state health regulations.

Cul-de-sac – A minor street having only one cutlet and having an appropriate terminal for the safe and convenient reversal of traffic movement; definition includes dead end, turnaround or turnabout.

Design Specifications – Written descriptions of a technical nature of materials, equipment, construction systems, standards, and workmanship required for a project intended for local government ownership or maintenance.

Developer – The owner of land proposed to be subdivided or his authorized representative.

Dwelling Unit – A room or rooms connected together constituting a separate, independent housekeeping establishment for owner occupancy, rental or lease on a daily, weekly, monthly, or longer basis; physically separated from any other room(s) or dwelling units which may be in the same structure; and containing independent cooking and sleeping facilities.

Easement – Authorization by a property owner for the use by another, for a specified purpose, of any designated part of his property.

Enforcing Officer – The Building Commissioner or such person designated by the Chief Executive Officer to be responsible for enforcing the provisions of these regulations.

Engineer – An engineer certified and registered by the State Board of Architectural and Engineer Examiners pursuant to Section 62-202, Tennessee Code Annotated, to practice in Tennessee.

Escrow – A fiduciary agreement with the local government in lieu of actual performance and intended to assure performance. An escrow account may be provided as a bond subject to agreement of Maury County.

External Subdivision Boundary – All points along the periphery of a subdivision.

Final Subdivision Plat – The final map or drawing and accompanying materials, described in these regulations, on which the subdivider's plan of the subdivision is presented to the Planning Commission for approval and which, if approved by the Commission, is recorded with the County Register of Deeds.

Flag Lot or Irregular Shaped Lot–
A Flag Lot is an irregular shaped lot that has a narrow width extending from a road to a larger area to be designed for the building area or where the front area of the lot is large and extends from the road to an area in the rear or side of the lot that is narrow A Flag Lot or Irregular Shaped Lot may be permitted by the Planning Commission if justified that other layout configuration is not available in the opinion of the Planning Commission. If a Flag Lot or Irregular Shaped Lot is permitted by the Planning Commission it is subject to compliance with the following:
The minimum lot width requirement shall be met at both the Front Yard and Rear Yard setback lines. The narrow portion of the Flag Lot must be owned in fee simple, but shall not count towards the minimum lot area. The minimum width of the narrow portion of the Flag Lot shall have a minimum 50 feet width of road frontage access to a public roadway.
A Flag Lot or Irregular Shaped Lot may provide access to only a single Lot. Where a street could serve lots designed as Flag Lots, a road shall be installed rather than using a series of Flag Lots.
In no event shall a subdivision be developed or created using a series of Flag Lots or Irregular Shaped Lots.

Flood" or "Flooding - means a general and temporary condition of partial or complete inundation of normally dry land areas from:
1. The overflow of inland or tidal waters.
2. The unusual and rapid accumulation or runoff of surface waters from any source.

Flood Frequency – The statistically determined average for how often a specific flood level or discharge may be equaled or exceeded.

Flood Hazard Boundary Map (FHBM) - means an official map of a community, issued by FEMA, where the boundaries of areas of special flood hazard have been designated as Zone A.

Floodplain or Floodprone Area - means any land area susceptible to being inundated by water from any source (see definition of "Flood or Flooding").

Floodplain Management - means the operation of an overall program of corrective and preventive measures for reducing flood damage, including but not limited to emergency preparedness plans, flood control works and floodplain management regulations.

Flood Profile – A graph showing the water-surface elevation or height or a particular flood event for any point along the longitudinal course of a stream. The flood profile is determined through the use of standard open-channel hydraulic calculations.

Floodproofing - means any combination of structural and nonstructural additions, changes, or adjustments to structures which reduce or eliminate flood damage to real estate or improved real property, water and sanitary facilities and structures and their contents.

Floodway - means the channel of a river or other watercourse and the adjacent land areas that must be reserved in order to discharge the base flood without cumulatively increasing the water surface elevation more than a designated height.

Floodway Encroachment Limits – The lines marking the limits of floodways on official federal, state and local floodplain maps.

Floodway Fringe – The area adjoining a watercourse which, although not lying within a floodway, has been or may hereafter be covered by a 100-year flood.

Frontage – That side of a lot abutting a public way ordinarily regarded as the front of the lot. It shall not be considered as the ordinary side of a corner lot.

General Plan – The official document of the Planning Commission which sets forth major policies concerning future comprehensive growth and development of the jurisdictional area and meeting the provisions set forth in Sections 13-3-301, 13-3-302, and 13-4-102, Tennessee Code Annotated.

Governmental Agency – Any public body other than the Legislative Body of Maury County.

Governing Body – The Chief Legislative Body of any government.

Governmental Representative – An outside person or designated local official or employee authorized to act on behalf of the Governing Body in making determinations regarding legal, public works, planning, community development, or other public business.

Grade – The slope of a public way specified in percentage terms.

Highway, Limited Access – A freeway or expressway providing a traffic way for through traffic, in respect to which owners or occupants of abutting property(s) or lands and other persons have no legal right of access to or from the traffic way, except at such points and in such manner as may be determined by the public authority having jurisdiction over such traffic way.

Horizontal Property Act – "The Tennessee Horizontal Property Act" as codified in Sections 64-2701 through 62-2722, Tennessee Code Annotated.

Individual Sewage Disposal System – A septic tank, seepage tile sewage disposal system, or any other sewage treatment device other than a public treatment system approved by the appropriate governmental representative.

Internal Subdivision Boundary – All points within a subdivision which do not constitute external boundaries.

Joint Ownership – Joint ownership among persons shall be construed as the same owner for the purpose of imposing subdivision regulations.

Jurisdictional Area – Planning boundary(s) established in keeping with Sections 13-3-102, 13-3-201, and 13-3-301, Tennessee Code Annotated.

Land Surveyor – A land surveyor certified and registered by the State Board of Land Survey Examiners pursuant to Section 62-1803, Tennessee Code Annotated, to practice in Tennessee.

Legal Counsel – The person designated by the Governing Body to provide legal assistance for the administration of these and other regulations.

Lot – A tract, plot, or portion of a subdivision or parcel of land intended as a unit for the purpose, whether immediate or future, or transfer of ownership, or for building development.

Lot, Corner – A lot situated at the intersection of two (2) public ways.

Lot Improvement – Any building, structure, place, work of art, or other object or improvement of the land on which they are situated constituting a physical betterment of real property, or any part of such betterment.

Lowest Floor - means the lowest floor of the lowest enclosed area, including a basement. An unfinished or flood resistant enclosure used solely for parking of vehicles, building access or storage in an area other than a basement area is not considered a building's lowest floor; provided, that such enclosure is not built so as to render the structure in violation of the applicable non-elevation design requirements of the Maury County Zoning Resolution.

Lowest Floor Elevation - means the elevation of the Lowest Floor as defined herein, as defined in the Maury County Zoning Resolution and that meets the requirements of the Maury County Zoning Resolution.

Major Street or Road – A public way which is classified as a collector or arterial public way according to these regulations or by the Major Street or Road Plan for the jurisdictional area.

Major Street or Road Plan – The plan adopted by the Planning Commission, pursuant to Section 13-3-402 and 13-4-302, Tennessee Code Annotated, showing, among other things, "the general location, character, and extent of public ways . . . (and) the removal, relocation, extension, widening, narrowing, vacating, abandonment or change of use of existing public ways . . ."

Major Subdivision – All subdivisions not classified as minor (final) subdivisions including but not limited to subdivisions of six (6) or more lots or subdivisions of any size requiring any new or improved road, the extension of government facilities, or the creation of any public improvements, or containing any flood prone area.

Minor Street or Road – A public way which is not classified as an arterial or collector.

Minor Subdivision – Any subdivision containing less three (3), or four (4), or five (5) lots fronting on an existing public way; not involving any new or improved public way, the extension of public facilities, or the creation of any public improvements, and not in conflict with any provision of the adopted General Plan, Major Street or Road Plan, zoning ordinance, or these regulations.

National Flood Insurance Program – A program established by the U. S. Government in the National Flood Insurance Act of 1968, and expanded in the Flood Disaster Protection Act of 1973, in order to provide flood insurance at rates made affordable through a federal subsidy in local political jurisdictions which adopt and enforce flood plain management programs meeting the requirements of the National Flood Insurance Program regulations. The program regulations are found at 24 Code of Federal Regulations, Chapter X, Subchapter B.

Off-Site – Any premise not located within the area of the property to be subdivided, whether or not in the same ownership of the application for subdivision approval.

100-Year Flood – see **Base Flood**.

Owner – Any person, group of persons, firm or firms, corporation or corporations, or any other legal entity have legal title to or sufficient proprietary interest in the real property.

Performance Bond – See "Bond".

Perimeter Street – Any existing street to which the parcel of land to be subdivided abuts on only one side.

Planning Commission – A public planning body established pursuant to Title 13, Chapters 2 or 5, Tennessee Code Annotated, to execute a partial or full planning program within authorized area limits.

Preliminary Plat – The preliminary drawing or drawings, described in these regulations, indicating the proposed manner of layout of the subdivision to be submitted to the Planning Commission for approval.

Premise(s) – A tract of land together with any buildings or structures which may be thereon.

Public Improvement – Any drainage ditch, roadway, parkway, sidewalk, pedestrian way, tree, lawn, off-street parking area, lot improvement, or other facility for which the local government may ultimately assume the responsibility for maintenance and

operation or which may affect an improvement for which government responsibility is established.

Public Way – Any street, alley, sidewalk, roadway, or land right-of-way which provides for movement of pedestrians or vehicles.

Reach – A hydraulic engineering term to describe longitudinal segments of a stream or river. A reach generally includes the segment of the flood hazard area where flood heights are influenced by a manmade area where flood or natural obstruction. In an urban area, the segment of a stream or river between two consecutive bridge crossings typically would constitute a reach.

Regulatory Flood – The one hundred (100) year flood.

Regulatory Floodway - means the channel of a river or other watercourse and the adjacent land areas that must be reserved in order to discharge the base flood without cumulatively increasing the water surface elevation more than a designated height.

Resubdivision – A change in a map of any approved or recorded subdivision plat altering the number of lots incorporated within the confines of the original plat.

Right-of-Way – A strip of land occupied or intended to be occupied by a public way, crosswalk, railroad, electric transmission line, oil or gas pipeline, water main, sanitary or storm sewer line, or for another special use. The usage of the term "right-of-way", for land platting purposes, shall mean that every right-of-way hereafter established and shown on a final plat is to be separate and distinct from the lots or parcels adjoining such right-of-way and shall not be included within the dimensions or areas of such lots or parcels.

Road, Existing - A road on the Official Road List of Maury County Tennessee.

Roadway – The actual road surface including necessary road shoulders and drainage facilities including ditches and curbs and gutters, which is used for vehicular movement.

Sale or Lease – Any immediate or future transfer of ownership, including contract of sale or transfer, of an interest in a subdivision or part thereof, whether by metes and bounds, deed, contract, plat, map, or other written instrument.

Same Ownership – Ownership by the same person, corporation, firm, entity, partnership, or unincorporated association or ownership by different corporations, firms, partnerships, entities, or unincorporated associations, in which a stockholder, partner, associate, or a member of his family owns an interest in each corporation, firm, partnership, entity, or unincorporated association.

Setback – The distance between a building wall and the nearest public way right-of-way or property line.

Sidewalk – A paved path provided for pedestrian use located along the side of a road.

Concept Plan – A Concept preparatory to the preliminary plat (or final subdivision plat, in the case of minor subdivisions).

Special Flood Hazard Map – the official map designated by the Federal Insurance Administrator to identify floodplain areas having special flood hazards.

Staff Assistant to the Planning Commission – The person(s) employed by the local governing body to assist the Planning Commission in planning and land use regulation activities.

Start of Construction – For purposes of subdivision control, any alteration of the original surface area of the land, from and after the date of adoption of these regulations.

Street – A public road, highway, or thoroughfare which constitutes, or is designed to constitute, the main access to more than one lot and which has been legally dedicated and accepted for public use.

Structure – Anything constructed above or below ground.

Subdivider – Any person who:

(1) having an interest in land, causes it, directly or indirectly, to be divided into a subdivision or who;
(2) directly or indirectly sells, leases, or develops or offers to sell, lease, or develop, or advertises for sale, lease, or development, any interest, lot, parcel site, unit, or plot in a subdivision or who;
(3) engages, directly or indirectly, or through an agent in the business of selling, leasing, developing, or offering for sale, lease, or development, a subdivision of any interest, lot, parcel site, unit, or plot in a subdivision or who;
(4) is directly or indirectly controlled by or under direct or indirect common control with any of the foregoing.

Subdivision (Applies Within the Corporate Limits – "Subdivision" means the division of a tract or parcel of land into two (2) or more lots, sites, or other divisions requiring new street or utility construction, or any division of five (5) acres or less for the purpose, whether immediate of future, of sale or building development, and includes resubdivision and when appropriate to the context, relates to the process of resubdividing or to the land or area subdivided. (See Section 13-4-301, Tennessee Code Annotated.)

Subdivision (Applies Within the Planning Region But Outside of Corporate Limits – "Subdivision" means the division of a tract or parcel of land into two (2) or more lots, sites, or other divisions requiring new street or utility construction, or any division of five (5) acres or less for the purpose whether immediate or future, of sale or building development, and includes resubdivision and when appropriate to the context, relates to the process of resubdividing or to the land or area subdivided. (See Section 13-3-401, Tennessee Code Annotated.)

Subdivision Agent – Any person who represents or acts for or on behalf of a subdivider or developer in selling, leasing, or developing or offering to sell, lease, or develop any interest, lot, parcel, unit, site, or plot in a subdivision, except in an instance where only legal counsel is provided.

Temporary Improvement – Any improvement built and maintained by a subdivider during construction of the subdivision and prior to release of the surety for completion of required improvements.

Twenty-Five (25) Year Flood – A flood having a 4% chance of occurrence in any year.

Water Surface Elevation – The heights in relation to mean sea level expected to be reached by floods of various magnitudes and frequencies at pertinent points in the floodplain. Also the level of natural flows or collectors or water which may be expected to be found above or below surface.

Zoning Ordinance or Resolution – A statute, legally adopted pursuant to Title 13, Chapters 4 or 7, Tennessee Code Annotated, for the purpose of regulating by district, land development or use for a designated area.

ARTICLE VII

SPECIAL PROVISIONS GOVERNING OWNERSHIP (CONDOMINIUM) SUBDIVISIONS

General Provisions –

A. **Intent** -- This section is intended to augment the general legislation of TCA Sections 66-27-101 through 66-27-123 entitled "Horizontal Property Act," by providing supplemental rules and regulations for the implementation of the Act, as specifically authorized in TCA Section 66-27-121.

B. **Applicability** -- Whenever a developer, the sole owner, or the co-owners of a building or buildings, expressly declare through the submission of a master deed, lease, or plat their desire to submit their property to a regime, as established and provided by TCA Sections 66-27-101 through 66-27-123, wherein there is established a horizontal property regime, each such condominium or horizontal property regime created under the authority of these provisions for the purpose of sale or transfer of real property is subject to the provisions of these Regulations.

Submission of Plat Required -- Prior to the sale or transfer of any property incorporated in the property regime, the developer, sole owner, or co-owners of such property shall submit to the Planning Commission a subdivision plat of such property in the manner prescribed by this ARTICLE; such plat, if approved, shall be filed with the County Register in the manner prescribed by this ARTICLE.

Determination of Subdivision Type -- Condominium subdivisions (as defined in ARTICLE VI of these Regulations) shall be classified by the Planning Commission during the plat review process as either horizontal condominiums or vertical condominiums.

Procedure -- An applicant seeking approval of a condominium subdivision shall proceed through the normal procedure for subdivision approval, as set forth in this ARTICLE.

Contents of Plans and Documents -- The plats, plans, and documents submitted by an applicant seeking approval of condominium subdivision shall conform to the specifications set forth in ARTICLE V of these Regulations.

ARTICLE VIII

ADOPTION OF REGULATIONS AND AMENDMENTS

8-101 **Original Enactment** – In order that land shall be subdivided in accordance with the objectives and standards set forth in these regulations, these subdivision regulations are hereby adopted this the 19th day of December, 1985, and immediately shall be in full force and effect.

Pursuant to Section 13-3-403, Tennessee Code Annotated, a public hearing was held on these regulations, notice of which was given by publication in The Daily Herald on November 1, 1985.

8-102 **Comprehensive Revisions Enactment** – The comprehensive revisions to the Maury County, Tennessee Subdivision Regulations are hereby adopted this 6th day of April 2009 and shall be in full force and effect on the 8th day of June 2009.

Pursuant to Section 13-3-403, Tennessee Code Annotated, public hearings were held on these comprehensively revised Subdivision Regulations on the 5th day of January 2009 and on the 6th day of April 2009 in the Third Floor Conference Room, Building #1 Courthouse Square Columbia, Tennessee, notices of which were given by publications in *The Daily Herald* on November 26, 2008 and on March 5, 2009.

Roxanne S. Howell — April 29, 2009

Roxanne S. Howell — **Date**
Chairman
Maury County Regional Planning Commission

April 29, 2009

Doug Church — **Date**
Secretary
Maury County Regional Planning Commission

APPENDIX A

Roadway and Drainage Technical Standards

Maury County, TN

TABLE OF CONTENTS

1 GENERAL PROVISIONS AND REQUIREMENTS

1.1 - Purpose and Scope page 5
1.2 - Jurisdiction / Regulations page 5
1.3 - Specifications and Resources page 5
1.4 - Plan Review Procedure / Performance Agreements and Fees page 5
1.5 – Permits and Fees page 6
1.6 - Notification of Construction page 6
1.7 - Quality Control Testing & Construction Surveying page 6
1.8 – Inspection page 8
1.9 - Acceptance of Facilities page 8
1.10 – Variances page 8
1.11 - Revisions to these Specifications page 9

2. PLAN STANDARDS

2.1 – General page 10
2.2 – Survey page 10
2.3 – Preparation page 10
2.3.1 - Dimensions and Directions page 10
2.3.2 - Sheet Size page 11
2.3.3 - Drafting Specifications page 11
2.4 - Construction Plans page 11
2.5 – Submission page 13
2.6 - Revision of Plans page 14

3. ROAD DESIGN

3.1 Standards for Design page 15
3.1.1 General page 15
3.1.2 Location and Layout of New Roads page 15
3.1.3 Traffic Impact Analysis page 16
3.1.4 Connectivity page 16
3.1.5 Traffic Control Devices page 16
3.1.6 Private Roads page 16
3.2 Road Classification and Right-of-Way page 16
3.2.1 General page 16
3.2.2 Road Classifications page 16
3.2.3 Typical Details page 17
3.2.4 – Right-of-Way and Easements page 17
3.3 Design Criteria page 18
Table 3-1 General Design Standards for Roads page 19
3.3.1 - Design Speed page 22
3.3.2 Road and Lane Widths page 22
3.3.3 Special Road Configurations page 22
3.3.4 - Horizontal Alignment page 22
3.3.5 - Vertical Alignment page 24
3.3.6 Sight Distance page 24
3.3.7 Lane Transitions page 25
3.3.8 Intersections page 25
3.3.9 Curbs & Gutters, Shoulders and Ditches, Driveways within the ROW pg 26

4. ROAD CONSTRUCTION

4.1 Overview page 27
4.2 Reference Specifications page 27
4.3 Permits & Fees page 27
4.4 Soil Erosion/Sediment Control page 27
4.5 Utility Coordination page 28
4.6 Clearing and Grubbing page 28
4.7 Excavation page 28
4.8 Undercutting page 29
4.9 Embankment page 30
4.10 Underdrains page 30
4.11 Road Damages page 31
4.12 Dust Control page 31
4.13 Final Dressing page 31
4.14 Seeding and Sodding page 31

5. PAVEMENT DESIGN

5.1 – Overview page 32
5.2 – Requirements page 32
5.2.1 – General Criteria page 32
5.3 – Design Criteria page 33
5.4 – Pavement Structure Components page 34
5.5 – Installation page 34
5.6 – Testing page 36

6. STRUCTURES

6.1 Overview page 37
6.2 Reference Specifications page 37
6.3 Pipe Culverts and Storm Sewers page 37
6.4 Pipe Culvert Headwalls page 38
6.5 Storm Drainage Structures page 38
6.6 Road Curbs and Gutters page 38

7. TRAFFIC SIGNS AND MARKINGS

7.1 - Signing-General page 39
7.2 - Design, Installation, and Maintenance page 39
7.3 - Sight Visibility Standards for Traffic Control Signs page 39
7.4 - New Road Signing page 39
7.5 - Other Standards page 39
7.6 - Sign Posts, Supports, and Mountings page 39
7.7 - Sign Reflectivity page 39
7.8 - Sign Blanks page 39
7.9 - Pavement Marking and Striping - General page 40
7.10 - Pavement Markings (Symbols, Arrows, Word Markings) page 40
7.11 - Pavement Striping page 40
7.12 - Temporary Striping page 41

8. DRAINAGE DESIGN

8.1 – Overview page 42
8.2 – Requirements page 42
8.2.1 – Stormwater Management page 42
8.2.2 – Minimum Standard Design Frequencies page 42
8.2.3 – Drainage / Hydrology Calculations page 43
8.2.4 – Drainage Structures page 44
8.2.5 – Drainage Inlets page 45
8.3 – Ditch Sections page 45
8.4 – Temporary and Permanent Stabilization and Vegetation page 45
8.5 – Detention / Retention Basins page 45
8.6 – Best Management Practices (BMPs) page 46
8.7 – Inspection and Observations page 46

STANDARD DETAILS

1 Minor Local & Local Roadway Section
2 Collector Roadway Section
3 Typical (Ditch-Section)l Roadway Section (if permitted by Road Supt.)
4 Extruded Concrete Curb
5 Mountable Curb with Gutter
6 Standard Concrete Curb (Post Curb)
7 Standard Curb with Gutter
8 Trench Repair Within Roadway
9 Trench Repair Within Roadway
10 Trench Backfill Sections
11 Precast Concrete Headwall with Energy Dissipaters
12 Precast Concrete Headwall
13 Barricade Typical Detail

1. GENERAL PROVISIONS AND REQUIREMENTS

1.1 - Purpose and Scope

This document describes roadway design guidelines for designing roadways and drainage improvements and facilities within the jurisdiction of the Maury County Regional Planning Commission that are outside of municipal limits (hereinafter referred to as "County").

1.2 - Jurisdiction / Regulations

These rules and regulations governing the construction of roads, which are to be included within the road system of the Maury County, Tennessee, shall apply to all areas within the jurisdiction of the County.

1.3 - Specifications and Resources

The following publications may be referred to in these specifications or listed for convenience for future reference.

> "A Policy on Geometric Design of Highways and Roads", American Association of State Highway and Transportation Officials; AASHTO.
>
> "Guidelines for Urban Major Road Design, a Recommended Practice", Institute of Transportation Engineers; ITE.
>
> "Manual on Uniform Traffic Control Devices for Roads and Highways", (MUTCD) U.S. Department of Transportation, Federal Highway Administration; FHWA.
>
> The Tennessee Department of Transportation; TDOT, "Standard Specifications for Road and Bridge Construction", latest edition, technical specifications only, shall apply and be adhered to unless superseded by these specifications.

In the event of a conflict between this document and the referenced specifications aforementioned, the specifications contained in this document shall govern.

1.4 - Plan Review Procedure / Performance Agreements and Fees

After receiving approval of the Preliminary Plat, and/or Site Plan, the Developer or the Developer's Engineer shall submit construction drawings for approval. The submittal shall include documents and drawings to include all aspects of the roadway, grading and drainage; including documentation or supporting engineering calculations. The construction drawings and drainage calculations shall bear the stamp of a Registered Tennessee Professional Engineer. Approved plans shall be required prior to the start of any work on the project.

Other submittals for approval which are necessary and to be done by the Developer might include, but are not limited to: the Maury County Regional Planning Commission; the Maury County Road Superintendent, the Maury County Commission, the Tennessee Department of Transportation (TDOT); the Tennessee Department of Environment and Conservation (TDEC); and the Tennessee Division of Water Pollution Control, Natural Resources Section.

For approval by Maury County, a letter of transmittal along with the construction drawings and specifications (Plans) and a check for the Plan Review Fee shall be submitted to the Building & Zoning Office. The Plans submittal shall consist of neat, scaled drawings with specifications and any other pertinent supportive data as required for review approval in at least 2 copies for initial review. After approval of the plans at least 4 sets will be required of which 4 sets will be retained by the County with the remainder to be returned to the Developer or his Engineer. A set of approved Plans shall be at the construction site at all times. Plans will not be deemed approved until the Building & Zoning Office's stamp of approval have been affixed to the cover sheet of the drawings and specifications.

Approval of construction drawings shall be valid in accordance with **Article 2-104 – Expiration/Vesting of Construction Plans**

1.5 – Permits and Fees

Prior to beginning any construction, the Developer and/or Contractor, shall obtain all necessary permits as required by law. Such permits include, but are not limited to, those required by State of Tennessee, Maury County Regional Planning Commission, Maury County Road Superintendent, other Maury County agencies and utility companies.

The Developer shall obtain a Notice Of Coverage (NOC) from TDEC prior to beginning any construction activities.

Once the grading and drainage plans are approved, the Developer and/or Contractor must complete the following steps prior to starting clearing and grading activities.

1) Pay fees to the County for reimbursement of the County's inspection fees. Construction plans will not be released until the fees are paid by the Developer.
2) Install all required erosion control measures and tree protection fencing on the site as shown on the approved plans.
3) Stake the centerline of the proposed roads.
4) A copy of the approved Grading and Drainage plans MUST be kept on site at all times while construction is taking place

1.6 - Notification of Construction

Before commencing any road construction operations, a 24-hour notice must be given to the Building & Zoning office. This advance notice is required for all road construction projects to ensure proper inspection staff scheduling with the County. Demolition permits, if required for the project, shall be obtained from the County Building & Zoning Department. Any work performed, including placement of fill, prior to permit and proper notification to the County will be removed and replaced in accordance with the regulations.

1.7 - Quality Control Testing & Construction Surveying

1.7.1 Construction Surveying

To facilitate the field observations, reviews and quality control testing to be performed by the County or its authorized representatives the Developer and the Developer's contractor shall provide construction surveying and staking at no cost to the County. This shall include initial surveying and staking as well re-surveying or re-staking. The minimum surveying tasks shall

include but are not limited to:

(a) Centerline of the proposed roadways for clearing and grubbing.
(b) Centerline of the proposed roadways with proposed cut and/or fill depths to subgrade.
(c) Cut slope and fill slope limits if needed by the County.
(d) Verifying the proposed subgrade for roadways are constructed to the design elevations. Provide with proposed cut and/or fill depths to subgrade.
(e) Locations and elevations of catch basins, headwalls, culverts, ditches, basins, and other stormwater facilities.
(f) Cut & fill areas and mass grading areas that are outside the road rights-of –way,
(g) Confirm stormwater detention or retention basins are graded & constructed per the approved plans. This includes outlet control structures or facilities.
(h) Off-set staking of survey points to facilitate on-site reviews.

1.7.2 Primary Testing

The primary methods of testing shall be by proof rolling and on-site field observations by the County or its authorized representative.
The Developer and the Developer's contractor shall coordinate with the County in order for the proof rolling of the various stages of roadway construction to be observed by the County or its authorized representative. Proof rolling is to be accomplished for areas to include but not limited to:

(a) all subgrade
(b) fills over 18-inches thick, proof roll every one-foot thick loose fill layer,
(c) any areas that are undercut
(d) any areas that are re-filled and/or backfilled

If the County or authorized representative are not present during the proof rolling for a stage of construction then the fill or work is subject to being removed and replaced at the Developer's expense. The Developer will be at risk for executing work beyond fill and/or subgrade that has not been observed by the County or authorized representative.

The Developer shall provide and pay for the necessary labor, equipment, materials and supervision required to support field observations and testing by the County at no cost to the County.

1.7.3 Secondary Testing

The County can require secondary testing to help determine if the roads are being constructed to the satisfaction of the County. Secondary testing can include but is not limited to the following:

Construction materials, including soil fills, rock fills, aggregate base stone, asphalt, concrete, and roadway sub-grades shall be fully tested in accordance with the designations and requirements within the referenced "TDOT Standard Specifications" sections. Unless otherwise noted within the "TDOT-Standard Specifications" section, the type and number of tests called for by the referenced standards shall be performed. The County can likewise require borings and coring to be performed to provide verification and information to assist in determining if the road construction meets required specifications.

Testing shall be done by an independent testing laboratory whose qualifications are approved by the County. The Developer shall provide and pay for the cost of all testing and re-testing. Testing results will be submitted to and approved by the County. The County reserves the right to require industry standard certifications of testing and inspections by the testing laboratory, mills, shops and factories. Such certifications required shall be submitted in

duplicate.

The Developer shall provide and pay for the necessary labor and supervision required to support field testing by the independent testing firm and inspections by the County at no cost to the County. Test reports of field testing if applicable shall be submitted directly to the County. Defects disclosed by tests shall be corrected by the Developer at no cost to the County. The Developer is required to have the design engineer or a certified quality control inspector present during all phases of construction.

1.8 - Inspection

All projects shall be subject to inspection during and after completion of construction by an authorized representative(s) of the County. The Building & Zoning Office staff and consultants might also participate in performing observations during construction. Presence or absence of an inspector during construction does not relieve the Developer and/or Contractor from adherence to approved plans and material contained in these specifications. Materials and/or workmanship found not meeting requirements of approved plans and specifications shall be immediately brought into conformity with said plans and specifications.

An authorized representative of the County shall make a final inspection of the project after completion to determine acceptability of the work and for release of Performance Securities and/or Maintenance Securities if required.

The cost for inspection by the County or its authorized representatives during construction is covered by the fees established by the County. Additional inspection fees will be required when an inspection by the County fails and requires subsequent re-inspections. The Inspection Fee shall be paid to the County before release of the approved construction plans.

Drainage facilities including, but not limited to, culverts, detention basins and ditches, as well as the roadway sub-grade, base stone and binder & surface course shall be inspected, tested and given approval as required by the County. Final construction inspection for approval and acceptance of roads and drainage systems will not be granted until all work has been completed in accordance with the approved plans.

1.9 - Acceptance of Facilities

After construction has been completed, a final inspection will take place by the County. Acceptance will be issued once all Performance Agreements and requirements have been met and construction meets the extents considered satisfactory under these specifications. The Developer shall meet all requirements of the Performance Agreements and the Maintenance Agreements. At the appropriate time the County Road Superintendent will make a recommendation to the County Commission; the County Commission is the authorized body that will accept roads into the County road system.

1.10 - Variances

Variances from the standards in this manual will be considered by the Maury County Regional Planning Commission on a case-by-case basis.
If the Developer, Contractor, or utility responsible to the County for public improvements desires to design and construct such improvements in variance to these standards, such variance(s) should be identified in a written attachment to the initial submittal of plans.

The variance request(s) shall consist of:

- Identification of the standard provision to be waived or varied.
- Identification of the alternative design or construction standards to be adhered to.
- A justification of the variance request including impact on capital and

maintenance requirements and cost.

- Request shall be prepared and sealed by a professional civil engineer licensed to practice in the State of Tennessee.

1.11 - Revisions to these Specifications

Revisions to these specifications will be adopted by the Maury County Regional Planning Commission.

2. PLAN STANDARDS

2.1 - General

In order to provide consistency and maintain accuracies, the following criteria are to be utilized for the construction plans.

The initial construction plan submittal shall include 2 full scale plan sets.

The final construction plan submittal shall include 6 full scale plan sets. After approval of the plans 4 sets will be retained by the County with the remaining 2 sets (or more if more are provided) returned to the Developer or the Developer's Engineer. A set of approved Plans shall be at the construction site at all times. Plans will not be deemed approved until the Building & Zoning Office's stamp of approval has been affixed to the cover sheet of the drawings and specifications. Submitted with the final set shall be a CD containing all CAD files associated with the plan set. CAD files should be AutoCAD compatible. Also PDFs (portable document format) of the final plan set, are required in addition to the CD with AutoCAD.

2.2 – Survey

Survey procedures require that all surveys shall be tied to the State Plane Coordinate System using the Tennessee Geodetic Reference Network (TGRN). All surveyed coordinate values will be based on the North American Datum 1983 (NAD/83) (1995 adjustment) coordinates and appropriate notes indicating such shall appear on the topography plot.

All design computations shall be based on these adjusted coordinate values. This will ensure that all computed points on the project will have coordinate values tied to the State Plane System. Assumed coordinates will not be used.

2.3 - Preparation

The following sub-sections contain specific information on sheet preparation.

2.3.1 - Dimensions and Directions

All units of measurement shall be in English standard units of feet. Distances shown on the plans shall be to the nearest .01 foot (35 ft, 35.0 ft, and 35.00 ft, are acceptable; 35.001 ft is not acceptable). Bearings will be shown to the nearest second.

2.3.2 - Sheet Size

Designs are to be provided on 24" x 36" sheets. Each sheet shall have a left-hand margin of one and one-half inch (1 ½") for binding. Match lines may be required on sheets for clarity.

2.3.3 - Drafting Specifications

Font Size: Text on plans shall be legible, neat and orderly presented.

Title Block: Each submitted drawing shall have a border and title block in the right-hand side or lower right-hand corner of the drawing. The title block shall include a space for revisions and dates.

All submitted final plan sets and calculations shall be signed and sealed by a Tennessee registered professional engineer. Each sheet within the plan set shall be signed and sealed with the exception of any standard drawing that might be available from TDOT and the County's Standards Details.

2.4 - Construction Plans

Plans should be 100% complete when submitted for initial review. The project must meet requirements as they relate to appropriate public road approaches, required taper distances for pavement transitions, grades, vertical stopping sight distance, and intersection sight distance.

NOTE: Additional items may be requested by the County Building & Zoning Office or the Road Superintendent's Office as each project can present unique development and design issues that will need to be specifically addressed.

As a general guideline, the supporting calculations should include any engineering information that is pertinent to the project. These might include, but are not limited to the following:

- Drainage calculations including culvert and bridge analysis
- Drainage areas, runoff values, energy dissipaters
- Intersection sight distance calculations

The designer is encouraged to add notes on the plans explaining special situations or items which are not readily apparent and that would influence the proposed design. The following sheets and information will be reviewed for quality assurance at this submission. The information is intended to be a guideline and not limited to the following. The County may request additional information.

Title Sheet – Information on the title sheet should include the following:

- Project numbers
- Project location map including north arrow and scale
- Description of project work type
- Signature block
- TDEC Permit Numbers
- Utility providers list with name of contact, address, phone number(s).
- Sheet index

Standard Details – These should only show basic configuration and design features. This will typically include the following:

- Lane and shoulder widths
- Construction centerline
- Cross slopes
- Curbs

- Side slopes
- Shoulder configurations if warranted
- Retaining walls, culverts, and bridges if warranted
- Ditches
- Sidewalk locations and widths if proposed

Overall Plan Sheet – Include an Overall Plan sheet for projects to show an overall view of the project at a scale that is no smaller than 1-inch = 200-ft.

Plan and Profile Sheets - Elevations and grades of ditches are to be shown so that accurate right-of-way requirements can be determined. The plan and profile sheets typically shall include the following:

- Horizontal scale: 1-inch = 50-ft.
- Vertical scale: 1-inch = 5-ft. or 1-inch = 10-ft.
- Horizontal alignment (e.g., horizontal curve data, PC, PI, PT, bearings)
- Vertical alignment
- Alignment controlling features (e.g., high-water levels, existing cross roads and bridges, regulated drains, drainage structures, railroads, traffic maintenance considerations, cemeteries, historical buildings, parks, etc.)
- Drainage details, e.g., ditches, culverts, etc.
- Project limits
- Drainage features (e.g. pipe structures, ditch grades, inlets for storm-sewer trunk line designs, etc.)
- Public road approach and drive locations
- Construction limits
- Proposed right-of-way and construction easements
- Approximate roadside barrier locations
- The plan and profile sheets should reflect correct structure notations

Grading & Drainage Sheets – The grading & drainage sheets typically shall include the following:

- Existing contours; 2-ft contour interval
- Proposed contours; 2-ft contour interval
- Drainage and EPSC, sodding, rip-rap and sodded ditch locations
- Items to be removed or demolition items are noted.
- Permanent and temporary erosion prevention and sediment control (EPSC) measures
- Notes for grading, drainage and EPSC
- The grading plan shall show the grading within the ROW, adjacent to the ROW and all lot areas to be graded.
- Locate all streams and TDEC stream buffers.
- Show the location, dimensions, and elevation of any part of the subdivision within a flood prone area; existing or proposed structures of building sites, fill, storage of materials and flood proofing measures, as specified in these regulations; and the relationship of the above to the location of the stream channel, floodway, floodway fringe, the regulatory flood elevation, and the regulatory flood protection elevation;
- The water elevations of adjoining lakes or streams and the approximate high and low-water elevations of such lakes and streams shall be shown. All elevations shall be referred to the U.S.G.S. datum plane.

Drainage Structure & Pipe Data Table – The information to be included in the structure data table is as follows:

- Location
- Size
- Type
- Elevations and grades
- Pipe lengths and slope
- Type of headwall

Cross Sections – The County may require cross sections to depict or provide more detailed information.

Detail Sheets – The proposed layouts typically shall be included as follows:

- Turning movements and turn lanes
- Pavement markings
- Signage, including sign structures
- Retaining walls
- Drainage structures
- Superelevation transition diagrams
- Plans for temporary erosion control, traffic maintenance details, and traffic design elements (e.g., intersections, signals, signing and lighting).
- Signals
- Lighting
- Quantity lists (Can be provided separately to the Building & Zoning Office (in written tabular format. Preferred to be in Excel format; provide digital copy).

Traffic Maintenance Details – The proposed traffic maintenance scheme and phasing is to be outlined when required by the Maury County Regional Planning Commission.

Construction Traffic Details – The proposed construction traffic routing, scheme and phasing is to be outlined to include the location of proposed temporary construction roads when required by the Maury County Regional Planning Commission

2.5 – Submission

The following represents the minimum required for construction drawing submission to the County Building & Zoning Office's office. When submitting the documents for review, provide the following:

(1) Letter of Transmittal – this will include the date of submittal, contact information of the consultants and developer (names addresses, phones #, fax, email), project information, and a listing of submitted items.
(2) Indicate the number of sets of construction plans submitted. Plans (full-size plan sheets) and documents are to be securely bound. The plans shall be sealed and dated by a TN registered professional engineer.
(3) Indicate the number sets of supporting engineering drainage calculations and other calculations sealed and dated by a TN registered professional engineer.

NOTE: Additional items may be requested by the Maury County Regional Planning Commission or the County Road Superintendent as each project can present unique development and design issues that will need to be specifically addressed.

2.6 - Revision of Plans

Should, prior to, or during construction, necessary changes be needed that would in the opinion of the County Building & Zoning Office or the Road Superintendent's Office constitute significant revision of the plans already approved by the County, said plans shall be revised with said changes shown and resubmitted along with a letter stating why such changes are believed necessary. Changes deemed to be minor in nature by the County Building & Zoning Office may be made during construction with the changes noted for inclusion in the "as-built" drawings to be submitted to the County prior to final acceptance.

The County Building & Zoning Office shall have the right to re-review the portion of the set of Plans that are affected by the proposed revision.

3. ROAD DESIGN

3.1 Standards for Design

The purpose of this chapter is to present the criteria and guidelines for the design of subdivision and development roads and other related elements in the road right-of-way. It is to be used by Developers and their engineers in the design of subdivision and development roads for which approval by the Maury County Regional Planning Commission is required.

3.1.1 General

All design drawings and support data submitted to the County Building & Zoning Office for approval must be sealed and signed by a registered Professional Engineer, licensed to practice in the State of Tennessee.

The design criteria, as presented, are intended to aid in preparation of plans and specifications, and include minimum standards where applicable. Design of roads are to be designed based upon the TDOT Roadway Design Guidelines (latest edition) unless otherwise noted in these specifications. For items not addressed in the TDOT guidelines, the AASHTO "A Policy on Geometric Design of Highways and Roads" (hereinafter referred to as the "Green Book", latest edition) should be consulted for guidance. Where conflicts exist or interpretations are required, the County Building & Zoning Office shall make the final determination.

3.1.2 Location and Layout of New Roads

The location and layout of new roads shall be as identified in the Major Road Plan, Subdivision Regulations and Zoning Resolution. Roads not identified in the Major Road Plan shall meet the needs of the specific development and satisfy all other specific requirements of this chapter.

The road layout for all subdivisions should be designed to ensure connectivity, enhance general circulation and to provide secondary points for emergency access. They shall also provide safe, efficient, and convenient access within and between developments. Certain roads may need to be extended to property boundaries to provide for the future logical extension of the road through adjacent properties. For road(s) located within or adjacent to a development, the proposed development shall continue the road to a termination point acceptable to the Planning Commission.

A major component in road layout is neighborhood traffic safety. This is an essential transportation issue in the County. Roads should be designed to limit excessive traffic speeds and volumes in neighborhoods and provide for safe travel for all modes of transportation

3.1.3 Traffic Impact Analysis

As a part of the development approval process, the Planning Commission may require, at no cost to the County, a Traffic Impact Analysis (TIA) to be prepared in accordance with industry standards.

3.1.4 Connectivity

Developments shall achieve internal road connectivity by providing multiple connections to the existing County road network.

3.1.5 Traffic Control Devices

All signs, markings, signals and other traffic control devices used on roads in the County shall be designed, installed and used in conformance with the State of Tennessee edition of the Manual on Uniform Traffic Control Devices (MUTCD), latest revision.

3.1.6 Private Roads

Private roads will only be allowed if permitted by the Zoning Resolution.

3.2 Road Classification and Right-of-Way

3.2.1 General

Listed below are the classifications of public roads used in the County. These classifications primarily provide different levels of emphasis in regard to traffic movement versus direct access to property. Transportation improvements developed in accordance with the road classification system should help to discourage through traffic from using local neighborhood roads, and local traffic from congesting regional travel facilities. This should not only improve the efficiency of the transportation system in the County, but will also maintain the livability of its neighborhoods.

The County Major Road Plan specifically identifies, Arterials and Collectors in the County. Roads without one of these classifications shall normally be considered a Local road. However, the County Building & Zoning Office shall have the authority to verify all road classifications for the purpose of applying road design standards or establishing design criteria for any new roadway.

3.2.2 Road Classifications

(1) Freeways and Expressways
Such roads are used to handle high traffic speeds and volumes. These road classifications emphasize traffic movement while restricting private access to adjacent land. All freeways and expressways in the County are anticipated to be owned and designed by the Tennessee Department of Transportation (TDOT).

(2) Arterial Roads
Arterial roads are intended to primarily serve moderate to high traffic speeds and volumes within and through the County. Arterial roads may provide some access to abutting property, but only as it is incidental to the primary functional responsibility of travel service for major traffic movements

(3) Collector Roads
Collector roads are intended to primarily serve slow to moderate traffic speeds and volumes and to distribute traffic from the arterials throughout the County to other collectors, arterials and local roads. Collector roads should provide both land access service and traffic circulation within residential neighborhoods and commercial and industrial areas.

(4) Local Roads
Local roads are intended to primarily serve slow speeds and volumes and to provide access to abutting lands and connections to the higher road classifications. Local roads are to be planned so that future development expansion will not require the conversion of local roads to collector or arterial roads. Local roads may be commercial/industrial or residential depending upon the type and extent of the development and zoning they serve. Local roads may be terminated by a "cul-de-sac" where necessary due to topographic or other constraints.

(5) Minor Local Roads
Minor Local Roads shall be defined as a loop road, no longer than 1200 feet or a permanent cul-de-sac no longer than 750 feet. Minor Local roads shall not provide access to more than 20 lots.

(6) Loop Roads
A road that has its entrance and exit on the same road and having no intervening roads other than short permanent cul-de-sacs. Any lots fronting on said intervening cul-de-sac shall be included in the count of lots served by the loop road.

3.2.3 Typical Details

Typical features and dimensions are illustrated in the road standard details (Appendix A). If not provided herein, they shall be as approved by the Maury County Regional Planning Commission.

3.2.4 – Right-of-Way and Easements

(1) Right-of-Way
Minimum right-of-way widths shall be per the Standard Details. Topography, special design features and other factors may require widths greater than this minimum. The Maury County Regional Planning Commission shall have final review with determination of any additional right-of-way that is required for the design of a specific road segment.

(2) Easements
The following types of easements may be required by the County. The first type is a Public Utility and Drainage Easement (PUDE) that shall be approved for use by the Maury County Regional Planning Commission on a case-by-case basis. The second type is a Temporary Construction Easement (TCE) that may be used to provide adequate construction area in the construction of a road project. A third type is a Slope Easement (SE) that provides for slopes between the road right-of-way and adjacent property. A fourth type is an Access Easement (AE) that allows multiple users of an access to the road. A fifth type is a Permanent Drainage Easement (PDE) for drainage purposes only.

(3) Improvements in Right-of-Way
It is the policy of the County to place all permanent public roads and road related features in public road right-of-way, with fee simple ownership by the County.

(4) Additional Right-of-Way Widths on Existing Roads
Developments that adjoin existing roads shall dedicate additional fee simple right-of-way, where necessary, to meet the minimum requirements for the road classification of the existing road, or other dimensions as required by the Maury County Regional Planning

Commission. This dedication shall be as follows:

(a) The entire right-of-way for the required road classification shall be provided where the development is on both sides of the existing road.

(b) When the development is located on only one side of the existing road, one half (1/2) of the required width of the right-of-way, measured from the center line of the existing road right-of-way shall be provided.

(5) Dedication Process

The dedication of right-of-way and easements for road purposes shall normally occur through the platting process. When dedications are required outside the platting process, they shall be dedicated in a manner and format recommended by the County and County Attorney and as approved by the County Commission.

3.3 Design Criteria

The design criteria apply to all roadways that are required to be designed and constructed to County subdivision road standards and specifications.

The Maury County Regional Planning Commission, in consultation with other County departments and State agencies, may allow modifications to the design criteria.

The Maury County Regional Planning Commission is authorized to require studies or other pertinent information to be provided by the Developer to help support or validate the modification request, at no cost to the County.

Roads are to be designed in accordance with the design speeds specified for each road classification and as summarized in Table 3-1.

TABLE 3-1 GENERAL DESIGN STANDARDS FOR ROADS

	RESIDENTIAL ROAD	NON-RESIDENTIAL ROAD
Design Speed (minimum) (MPH)		
Minor Local Road	20	N/A
Local Road	30	N/A
Collector Road	40	40
Arterial Road	To be determined by the Planning Commission	
Maximum Percentage Grade		
Cul-de-sac "bulb"	5%	N/A
Minor Local Road	12%	N/A
Local Road	12%	8%
Collector Road	8%	8%
Arterial Road	To be determined by the Planning Commission	
Minimum Percentage Grade		
All Roads	1%	1%
Horizontal and Vertical (Curves are to be designed as per AASHTO standards)		
Minimum K values for Vertical Curves (minimum length is 50-ft)		
Minor Local Road	(Crest: 7) (Sag: 17)	N/A
Local Road	(Crest: 19) (Sag: 37)	N/A
Collector Road	(Crest: 44) (Sag: 64)	(Crest: 44) (Sag: 64)
Arterial Road	To be determined by the Planning Commission	
Minimum Centerline Radius for Horizontal Curves		
Minor Local Road	100	N/A
Local Road	300	N/A
Collector Road	700	700
Arterial Road	To be determined by the Planning Commission	

Minimum Centerline Arc length		
Minor Local Road	100	N/A
Local Road	100	N/A
Collector Road	300	300
Arterial Road	To be determined by the Planning Commission	

Maximum Super-elevation (Foot/Foot)		
Minor Local & Local Road	N/A	N/A
Collector Road & Arterial Road	0.04	0.04
Run-out Length	Min. 100-ft (Refer to ASSHTO)	Min. 100-ft (Refer to ASSHTO)

Minimum Tangent Between Horizontal Curves (feet) and Approaching Intersections		
Minor Local Road	35	100
Local Road	50	100
Collector Road	150	150
Arterial Road	To be determined by the Planning Commission	

Reverse Curves: Minimum Tangent Between Curves (feet)		
Minor Local Road	50	N/A
Local Road	100	N/A
Collector Road	150	150
Arterial Road	To be determined by the Planning Commission	

Broken-Back Curves: Minimum Tangent Between Curves (feet)		
Minor Local Road	100	N/A
Local Road	200	N/A
Collector Road	300	300
Arterial Road	To be determined by the Planning Commission	

Lane Transitions and tapers to be designed as per AASHTO standards

Stopping Sight Distances- Minimum (In Feet) (To be designed as per AASHTO standards)		
Minor Local Road	115	N/A
Local Road	200	N/A
Collector Road	305	305
Arterial Road	To be determined by the Planning Commission	
Passing Sight Distances- Minimum (In Feet) (To be designed as per AASHTO standards)		
Minor Local Road & Local Road	N/A	N/A
Collector Road	1470	1470
Arterial Road	To be determined by the Planning Commission	

Intersections & Driveways Design- Minimum Sight Distance at & (Distances in Feet) (Sight distances required are based upon the classification of the street being intersected)		
Minor Local Road	150	N/A
Local Road	250	N/A
Collector Road	400	400
Arterial Road	To be determined by the Planning Commission	

Maximum Grade At Intersections: Distance from Intersecting Edge Of Pavement (EOP)		
Minor Local Road	6% for 35-ft from EOP	3% for 200-ft from EOP
Local Road	5% for 50-ft from EOP	3% for 200-ft from EOP
Collector Road	3% for 100-ft from EOP	3% for 300-ft from EOP
Arterial Road	To be determined by the Planning Commission	

Note: The Table is based upon the design speeds listed above. If the posted speed limit is greater or a selected design speed is greater than the above listed "Design Speed"; the requirements for design must likewise be increased. Refer to AASHTO design manuals.

3.3.1 - Design Speed

The minimum design speed used in road design shall be in accordance with Table 3-1.

3.3.2 Road and Lane Widths

Refer to the details provided in these regulations and standards.

3.3.3 Special Road Configurations

(1) Cul-de-Sacs
(a) Permanent cul-de-sacs shall not exceed 1500 feet in length (unless approved by the MCRPC for stated reasons). Cul-de-sac lengths shall be measured from the nearest 3 or 4 way intersection. A permanent cul-de-sac shall provide access to no more than 20 single family residential lots.

(b) Design Requirements: Cul-de-sac roads shall terminate in a circular turn around having a right-of-way radius of at least 50 feet, and a paved radius of at least 40 feet at its outside edge.

(c) Temporary Cul-de-Sac: Where a development is being implemented by sections, a temporary cul-de-sac may be used if the overall development plan allows the cul-de-sac to be eliminated at final build out of the development. When the cul-de-sac is less than 400-ft, a temporary cul-de-sac having radius of at least 40 feet constructed of DBST shall be provided within a temporary easement. The temporary easement will be automatically abandoned upon the continuation of the road. The easement radius shall be a minimum of 50. A performance security must be posted for the amount of required paving. A sign must be provided at the end of the temporary cul-de-sac noting that the road will be extended in the future. The Maury County Regional Planning Commission's preference is to locate the temporary cul-de-sac within the future phase.

(d) Cul-de-Sac Medians: A center median island may be permitted by the Maury County Regional Planning Commission where it can be demonstrated that all routine service vehicles and emergency vehicles can be readily accommodated to the satisfaction of the County emergency management agency and school system. Any median shall become part of the development common area and maintained by the homeowners association.

(2) Eyebrows
(a) Where Allowed: Eyebrows shall be permitted only on Local Roads. They may only be used in tangent sections.

(b) Design Requirements: Eyebrows shall be a minimum of twenty-five (25) feet in length and a maximum of fifty (50) feet measured along the flow-line. Lengths exceeding fifty (50) feet shall incorporate an island or median as approved by the Maury County Regional Planning Commission. Designs that require backing maneuvers for vehicles will be prohibited. Any island or median shall become part of the development common area and maintained by the homeowners association.

(3) Dead-End Roads
(a) Where Allowed: Permanent dead-end roads without cul-de-sac designs are prohibited.

(b) "Stub" Roads: Temporary dead-end "stub" roads (without temporary cul-de-sacs) will only be permitted on Local Roads and at the discretion of the Maury County Regional Planning Commission. On residential local roads, "stub" roads shall not be longer than one residential lot.

(b) Temporary Turnaround: At locations where a planned through road is approved to be temporarily terminated and is longer than one residential lot, a temporary turnaround shall be constructed as outlined in Section 3.3.3(d). DBST pavement is required in the temporary turnaround but no curb and gutter is required on temporary dead-end roads turnarounds. The Maury County Regional Planning Commission's preference is to locate the temporary turnaround within the future phase.
If the Temporary Turnaround is constructed within a future phase, the entire turnaround may be built within a temporary easement. If the Temporary Turnaround is to be constructed within a recorded section of the subdivision, the road stem (i.e. 50-ft wide) shall be dedicated as Road ROW and an additional temporary easement shall be provided for the remainder of the bulb. In either case, the temporary easement shall be included on the Final Plat with a note stating: "The temporary easement is established for the road turnaround and shall be abandoned upon extension and dedication of the road extension".

(c) Signs Required: A sign must be provided at the temporary road end noting that the road will be extended in the future. Signing for temporary, dead-end roads shall be in accordance with the requirements of Chapter 7, Traffic Signs and Markings.

3.3.4 - Horizontal Alignment

The design of horizontal curves in road design should be based on an appropriate relationship between design speed and curvature and on their joint relationships with superelevation and side friction. On Arterial and Collector roads, curve radii and tangents shall be as large as possible using the minimums only where necessary. Refer to Table 3-1 for design standards.

(1) Horizontal Curves on Vertical Curves For driver safety, horizontal curves shall not begin near the top of a crest vertical curve nor near the bottom of a sag vertical curve.

(2) Sight Distance on Horizontal Curves
Where there are sight obstructions on the inside of curves or the inside of the median lane on divided roads, the designer will need to adjust the cross section elements or change the alignment if removal of the obstruction is impractical to provide adequate sight distance.

(3) Coefficient of Friction The coefficient of friction shall conform to the values in the TDOT Standards or AASHTO Green Book, as appropriate.

(4) Off-Site Design Centerline, Flow-lines and Cross Sections
To assure that future road improvements will meet these Standards, the centerline, flow-line, and cross sections of all roads, except permanent cul-de-sacs, shall be continued for 200 feet beyond the proposed construction.

(5) Joining Existing Improvements Connection with existing roads shall be made to match the existing alignment grade of the existing improvements, in accordance with horizontal and vertical alignment criteria.

(6) Cross Slope: The cross slope shown on the Standard Details shall apply to the base stone as well as the pavement courses. The County may require verification by survey if the County deems necessary to obtain compliance.

Cross Slope for Road Modifications: When widening an existing road or adding turn lanes to an existing road the maximum cross slope shall be 3%. When providing asphalt overlays the maximum cross slope shall be 4%. The resulting cross slope of the widened portion shall be within the limits stated above and the new Cross Slope shall be no less than the existing cross slope. Alternatively, the existing pavement may be removed and re-profiled to comply with these Standards.

3.3.5 - Vertical Alignment

The design of vertical curves in road design should be simple in application and should result in a design that is safe and comfortable in operation, pleasing in appearance and adequate for drainage.

(1) Maximum and Minimum Grades for Roads The maximum and minimum grades for specific road classifications are shown in to Table 3-1.

(2) Requirements for Using Vertical Curves

Both centerlines and the curb and/or gutter flow-lines shall be designed with vertical curves to meet AASHTO Green Book requirements. A series of grade breaks may be used in lieu of a specified vertical curve as long as the series of breaks meet the vertical curve criteria in these Standards for the design speed. In sag curves on flow line, the minimum grade requirement shall override the slope within the vertical curve.

(3) Joining Existing Improvements Connection with existing roads shall be made to match the existing grade of the existing roadways, in accordance with vertical and horizontal alignment criteria (grade breaks shall not exceed allowable).

(4) Vertical Clearance
Vertical clearance above a road shall be a minimum of fourteen and three-tenths (14.3) feet unless the road is designated as a truck route, then the minimum vertical clearance shall be sixteen and one-half (16.5) feet. The County Building & Zoning Office may require greater clearance when considered necessary to meet future road operation requirements.

(5) Off-Site Continuance of Grade and Ground Lines
To assure that future road improvements will meet these Standards the grade and ground lines of all local and collector roads, except cul-de-sacs, shall be continued for a minimum of 200 feet beyond the proposed construction.

3.3.6 Sight Distance

(1) General
The design of the roads shall provide sight distance, as required, for Stopping Sight Distance in Table 3.1.

(2) Criteria for Measuring Sight Distance
For sight distance calculations, the height of the driver's eye shall be assumed to be 3.5-feet above the road's surface. For stopping sight distance calculations, the height of an object shall be assumed to be 2.0-feet above the road surface. For intersection sight distance calculations, the height of the intersecting vehicle shall be assumed to be 3.5-feet above the surface of the intersecting road. The designer shall consider the impacts of grades and vertical curvature in calculating sight distance.

(3) Sight Obstructions
Any object within a sight distance triangle more than twenty-four (24) inches above the flow-line elevation of the adjacent road shall constitute a sight obstruction, and shall be removed or lowered. Such objects include but are not limited to berms, buildings, parked vehicles on private property, cut slopes, hedges, trees, shrubs, mailbox clusters, utility cabinets or tall crops. In no case shall any permanent object encroach into the line-of-sight of any part of the sight distance triangle. Road trees within the sight distance easement may be excepted from this requirement if pruned up to eight (8) feet, and the trunks at maturity do not collectively hinder sight lines as determined by the County.

Road intersections shall be designed so that adequate sight distance is provided along all roads. The required sight distance shall be determined by the design speed and grades of the road and the acceleration rate of an average vehicle. In addition, for all roads that intersect with Arterial and Collector roads, the sight distance must be large enough to allow a vehicle to enter the road and accelerate to the average running speed without interfering with the traffic flow on the Arterial or Collector Road. Intersection sight distance is generally determined based on the different types of traffic control at an intersection. In most cases sight distance triangles will be required as described below. The different situations, or cases, that must be considered are defined in the following discussion.

Sight Distance Easements
All sight distance easements must be shown on the road plan/profile plans. All necessary sight distances must be within the public right-of-way or a sight distance easement dedicated to the County. When the line of sight crosses onto private property, a “Sight Distance Easement” shall be dedicated to provide the required clear sight distance. Terms of the easement shall be shown on the Final Plat. The condition causing the need for sight distance easement shall be eliminated by design measures if at all possible.

3.3.7 Lane Transitions - Lane transitions are to be designed to AASHTO standards.

3.3.8 Intersections

(1) Spacing of Intersections
Road jogs and/or intersections on minor collector and local roads of less than 200 feet shall not be allowed, except where both intersecting roads are cul-de-sacs in which case the road jogs with centerline offsets of less than one hundred and 125 feet shall not be allowed.

(2) Lane Alignment
All lanes shall be in alignment through each intersection. Should a shift of greater than 2-feet be allowed, special markings and signs may be required to support that shift design.

(3) Angle of Intersection
Crossing roads should intersect at 90 degrees whenever possible. In no case shall they intersect at less than eighty 80 degrees or more than 100 degrees.

(4) Curb Returns
Radii of Curb Returns: The corner radii at road intersections shall meet the following minimum requirements unless otherwise approved or required by the County Building & Zoning Office. For curb returns on a State Highway, TDOT’s curb radii requirements shall supersede these requirements. At road intersections in residential areas, the

minimum radius of curb return shall be 35 feet. In industrial and commercial areas, and when a residential road intersects with a non-residential road, the minimum curb return radius shall be 40 feet. The minimum radius at the property line at intersections shall be 25 feet. Where the angle of the road intersection is less than 90 degrees, the County Building & Zoning Office may require greater radii.

3.3.9 – Curbs & Gutters, Shoulders and Ditches, Driveways within the ROW

(1) Mountable Curb and Gutter
The mountable curb section shall be in accordance with the Standard Drawings. All new roads shall be constructed using mountable curb. A vertical curb and gutter may be used at the Developer's option.

(2) Shoulders
All subdivision roads constructed in the County are to be constructed with mountable curb or other approved curb section. Subdivision roads with a ditch section and shoulders are not allowed.

(3) Roadside Ditches
(a) Location: Ditches are <u>not allowed</u> in the County for new development or subdivision roads. Where the County approves a road section developed without curbs (and with roadside drainage ditches), the design must complete the ditch construction with the installation of sod or other approved erosion control blanket within the ditch area.

(b) Ditch Profile: The profile grade of the ditch shall be maintained at a minimum slope of one (1.0) percent and a maximum slope of five (5.0) percent. The side slopes of the ditches outside of the right-of-way shall not be steeper than 3H:1V and meet any specific criteria of the drainage study.

(c) Ditch Slope: The slope and capacity of any roadside ditches shall be maintained in any areas that driveways cross the ditch. Each site is required to provide a concrete pipe, a minimum of 18 inches in diameter, calculated to meet capacity and strength requirements of the drainage study. The pipe shall be designed by the developer's engineer to have no less than 12 inches of cover over the pipe. All portions of the driveway within the right-of-way shall be paved with concrete or asphalt.

(d) Ditch Maintenance: All ditches shall be maintained, repaired and re-vegetated initially and repeatedly until the County accepts the road.

(4) Driveways within the Public road Right-of-Way
All portions of a driveway within a public right-of-way shall be paved with concrete or asphalt. Gravel or DBST are not acceptable.
This applies to any driveway added to any development or subdivision.
This applies to construction by the Developer, Home Builder or Homeowner.

(5) Driveway Approach Length and Restrictions
Driveways for non-residential uses must extend a minimum of thirty (30) feet into the property past the lot line abutting the road before the edge of the driveway may be intersected by a parking lot space, aisle, or drive. The minimum length of the driveway restriction may be extended, provided that it is determined by the Building & Zoning Office that anticipated traffic volumes and commonly accepted and applied traffic engineering principles justify the need for longer, controlled storage lanes.

4. ROAD CONSTRUCTION

4.1 Overview

This Section includes all clearing and grubbing, stripping topsoil, excavation, undercutting, embankment, trench excavation, backfilling and testing required for construction of County roads within the County. Earthwork embankments and excavations shall be constructed in close conformance with the lines, grades and typical cross sections shown on the approved plans. Demolition of structures and other obstructions and abandonment plans are to be addressed in the construction plans. For all earthwork operations, the Developer/Contractor will be required to assist and/or provide for observations and testing. See Chapter 1 for additional testing and inspection requirements.

4.2 Reference Specifications

Unless modified by these specifications, all earthwork materials and construction requirements shall conform to the "Standard Specifications for Road and Bridge Construction" published by the Tennessee Department of Transportation (TDOT) (latest edition), hereafter referred to as the "Standard Specifications".

4.3 Permits & Fees

Refer to Chapter 1 for additional requirements.
Any work performed, including placement of fill, prior to permit and proper notification to the County will be removed and replaced in accordance with the regulations.

4.4 Soil Erosion/Sediment Control

All projects requiring disturbance of land will require the design of a site specific erosion prevention and sediment control (EPSC) plan. As a minimum, the plan shall provide for the temporary sediment control measures, designed to control runoff from a 2 year, 24 hour storm.

4.4.1 Stormwater Permits: All project erosion prevention and sediment control measures shall comply with TDEC Permits and TDEC's Best Management Practice Manual. BMP's available from other Municipal or County stormwater programs are available for additional guidelines. All erosion prevention and sediment control measures shown on the approved plans shall be in place prior to commencing land disturbance activities.

4.4.2 Other Permits: The Contractor and/or Developer are responsible for obtaining all permits required by other agencies and/or government entities having jurisdiction including but not limited to Tennessee Department of Environment and Conservation (TDEC), US Army Corp of Engineers and the

Tennessee Valley Authority.

4.5 Utility Coordination

Locating & protecting existing utilities and coordinating with utility providers is the responsibility of the developer, the developer's contractor, and their agents. Tennessee's One-Call utility location service shall be utilized in addition to coordination with local utility owners. The Contractor shall at all times protect existing utilities. The County shall not be responsible for damage to existing utilities, roadways and property; and the County's approval of the construction plans shall not be used as a defense by the developer or contractor. The Contractor and/or Developer are responsible for obtaining approvals and paying any fees or charges required by any utility.

4.6 Clearing and Grubbing

Before grading is started, the entire road right-of-way including side slopes shall be cleared of all objectionable matter, such as trees, stumps, roots, weeds, heavy vegetation, etc. Clearing outside of the road right-of-way shall be confined to the clearing limits shown on the approved construction plans.

4.6.1 Tree Protection: Living trees with drip lines located beyond the construction lines are to remain undisturbed and protected by the Contractor. The Developer will be responsible for establishing the lines of construction clearing in accordance with the above requirements.

4.6.2 Burning Permit: Burning of cleared vegetation and perishable debris must be coordinated and approved by the appropriate Local and State agencies.

4.6.3 Debris Removal: Unless otherwise approved, all debris (i.e. cleared trees, brush, fences, building materials, etc.) shall be removed from the right-of-way, out of view from the road, and shall not be buried or otherwise become part of the road subsurface or lot areas. Cleared materials from the Developer's property shall be legally disposed of.

4.7 Excavation

Excavation within the right-of-way includes stripping topsoil, grading of the road and required improvements, borrow material, blasting, channel excavation, rock excavation, undercutting and establishing an acceptable subgrade. Excavation shall be performed in close conformance to the lines, grades, side slopes and typical cross sections of the approved construction plans.

4.7.1 Property Protection: Excavation shall be performed in a safe and orderly manner with due consideration given to protection of adjoining property and trees outside the clear lines. Approved erosion control measures shall be installed and regularly maintained to insure protection of adjacent properties. Excavated material when required shall be stockpiled in such a manner as to not obstruct roads, driveways or other access points.

4.7.2 Safety: All excavation shall comply with OSHA's "Construction Industry Standards" as well as all applicable Federal and State regulations. Open excavations and cut slopes shall be protected by suitable means to protect

workers, inspectors and other pedestrians having access to the site.

4.7.3 Structure Excavation: Excavation for bridges, culverts and pipes shall be in accordance with the TDOT Standard Specifications. Excess rock excavation below foundation elevations shall be filled with leveling concrete. Excess rock excavation below the elevation of the bottom of the pipe bedding, cradle or encasement shall be filled with material of the same type and placed and compacted in the same manner as the bedding material.

4.7.4 Channel Excavation: Excavation within waterways will require approved permits prior to commencing operations, and the equipment shall be kept out of the waterway to the greatest extent possible.

4.7.5 Blasting: Rock excavation requiring blasting shall be performed in accordance with all State requirements. Blasting operations shall be performed only by experienced, licensed blasting Contractors. Blast areas shall be protected with mats or earth overburden to prevent flying debris. When blasting near public areas or motorists, blast zones are to be set up with proper signing and flagmen to secure the blast area prior to detonating explosives. The Contractor shall be responsible for all damages and shall repair or replace any and all damages at no expense to the County. A pre-blast survey and blasting monitoring is required by the County. The Contractor and Developer are responsible for making sure these items are accomplished.

4.8 Undercutting

When unsuitable material to include but not limited to, tree roots, trash, concrete and asphalt fragments or soft organic or plastic clays are encountered in the subgrade, the area shall be undercut and backfilled with select material. The Contractor and the Developer are responsible for executing required undercutting and re-establishing the subgrade to the satisfaction of the County. The Developer and the Contractor will need to address these matters within their private contract. The Developer and Contractor shall address how undercutting will be accomplished prior to commencing construction. Again, this is the responsibility of the Developer and the Contractor.

4.8.1 Limits of Undercutting: Areas and depths of undercutting required for existing roads will be determined by County officials during inspections of subgrade or roadway fill construction and for final acceptance of County roads. The extent of undercut areas shall primarily be determined by proof-rolling the subgrade and marking the areas of distress with marking paint or other means.

4.8.2 Proof-Rolling: Vehicles for proof-rolling shall be tandem axle dump trucks fully loaded with a minimum material payload of 23 tons. Material may be dry soil or rock loaded at the site or preferably loaded off-site at a quarry with crushed stone and accompanied with a certified weight ticket.

4.8.3 Backfill: Cuts or undercutting in the roadway shall be backfilled with (a) surge rock/shot-rock or (b) crushed stone or (c) suitable soils obtained from a borrow area that all must be approved by the County.
Backfill material should be placed in lifts not to exceed 12 inches unless more

stringent requirements are required based upon the material to be used. Each lift shall be compacted with a dozer or other approved heavy equipment. In any case the Contractor is responsible for placing materials in order to achieve an acceptable proof-roll or the undercutting operations will be repeated until it is done to the satisfaction of the County.

4.9 Embankment

Embankment material shall consist of approved soil or rock obtained from on-site excavations or hauled from an acceptable borrow pit area, and shall be placed in fill embankments in reasonably close conformance with the lines, grades, side slopes and typical cross sections shown on the approved plans. All embankments shall be placed in accordance with of the TDOT Standard Specifications.

4.9.1 Soil Materials: All borrow material used shall be of AASHTO M145 classification A-6 or better or of the same classification or better than the predominant soil comprising the roadway excavation. Borrow material shall be free of organic material, and shall not be obtained from wetland areas.

4.9.2 Rock Materials: Embankments comprised of shot rock shall be processed from an acceptable screening and or selection process that produces rock of the required gradation. Rock shall meet soundness requirements for degradable or non-degradable rock under a 60,000 lb roller compactor as stated in the Standard Specifications.

4.9.3 Soil Placement: Embankments comprised of predominantly soil or degradable rock shall be placed in horizontal layers not to exceed ten (10) inches in depth before compaction and each layer shall be compacted to a density not less than 95% of the maximum density. The top six (6) inches of the subgrade in both cut and fill sections shall be compacted to 100% of maximum density. In-place embankment material that pumps under wheel loading of a fully loaded tandem axle dump truck during proof-roll testing shall be undercut and removed. See Undercutting article for additional information.

4.9.4 Rock Placement: Embankments of predominantly non-degradable rock may be placed in three (3) feet thick lifts with no rock more than two (2) feet in thickness. Occasional rocks up to four (4) feet in thickness may be placed in the outer edges of the fill slope. Large rock fill shall be limited to 3-ft below subgrade.

4.10 Underdrains

In addition to stormwater drainage structures and appurtenances, subgrade underdrains may be required by the County during construction due to site specific subsurface conditions or drainage issues. Underdrains shall consist of free draining crushed stone, 4-inch diameter perforated pipe and filter cloth. All underdrains shall be constructed in accordance with TDOT standard drawing RD-UD-3 for underdrains with pipe and filter cloth.

4.11 Road Damages

Damage to existing or new roads/subgrade, and structures, utilities, trees, or private property

shall be repaired and restored to its original condition by the Contractor due to hauling or otherwise moving equipment, spills of concrete, paint, oil or any other debris which damages the road or results in cleanup costs for the County Road Department.

4.12 Dust Control

The Contractor/Developer shall sprinkle the road construction surfaces with water or apply a dust-allaying material when such operations are necessary to prevent a dust nuisance or if directed by a County representative.

4.13 Final Dressing

Road side slopes and ditches shall be shaped within reasonably close conformity to the specified lines, grades and cross sections. Ditches shall be fine graded to eliminate areas of ponded water. All rock cuts shall have all loose fragments removed and left in a neat, safe and workmanlike manner.

4.14 Seeding and Sodding

All slopes, ditches and detention ponds shall be stabilized with seeded grass or preferably sod. Stabilizing of disturbed areas shall be accomplished in accordance with the requirements of the Tennessee Department of Environment & Conservation permits, requirements and guidelines. Stabilized areas shall be considered acceptable for final inspection when the seeded or sodded area has an 80 percent or better establishment of grass coverage.

5. PAVEMENT DESIGN

5.1 – Overview

The Contractor and/or Developer shall provide all plant, labor, material and equipment to furnish and construct the bituminous concrete pavements in reasonable close conformity with the lines, grades, thickness and typical cross sections shown on the construction standards and specified herein, or as called for on the approved plans and specifications.

The specifications referenced for each material shall fully apply and no deviations from said specification limits or quality will be permitted unless specifically stated otherwise in this Section. The failure of any component of a product to comply with the referenced specifications shall constitute failure of the whole product.

The Contractor and/or Developer shall obtain approval of both the subgrade and stone base from the County Road Department prior to commencing with the paving operations.

For all paving operations, the Developer and/or Contractor may be required to provide testing from an independent geotechnical firm approved by the County. See Chapter 1 for additional testing and inspection requirements

5.2 – Requirements

5.2.1 – General Criteria

(a) - Existing Roads

For existing roads to be improved by the Developer, the County may require testing of the existing pavement and base structure to determine if an overlay is feasible, or if reconstruction is necessary. The County shall notify the Developer and/or Contractor if and when this testing is required.

(b) - TDOT Design Standards

The design criteria and procedures presented follow the TDOT Standard Specifications for Road and Bridge Construction, Sections 307, 407, 411, & 907, dated March 1, 2006 and the American Association of State Highway and Transportation Officials (AASHTO) 1993 Guide for the Design of Pavement Structures.

(c) - Pavement Type

Roads are to be constructed of asphaltic concrete pavement, base course material, or subbase material (where required), placed on compacted subgrade.

(d) - Treated Subgrade
The use of treated subgrade, treated base, and/or full depth asphalt pavement may be acceptable when designed and submitted by the professional engineer, and approved by the County in accordance with these standards as well as well the TDOT Standard Specifications for Road and Bridge Construction, Sections 302, 304, & 306.

5.3 – Design Criteria

5.3.1 –

(a) - Minimum Pavement Section
The Standard Drawings in Appendix A provide the minimum acceptable pavement sections.

5.3.2 – Special Considerations
(a) - Protecting & Rehabilitating/Repairing Existing Roads
On paved surfaces, within public right-of-ways, do not use or operate tractors, bulldozers, off-road trucks or other power-operated equipment, the treads or wheels of which are so shaped as to cut or otherwise damage such surfaces. Damaged roadways shall be repaired to the County's satisfaction by the Contractor and/or Developer. Placing of mats, steel plates or using other methods of protection may be allowed subject to the approval of the County and per the Standard Drawings.

Any roadway surface damaged shall be promptly restored to a condition at least equal to that in which they were found immediately prior to the beginning of operations. Suitable materials and methods shall be used for such restoration. All dirt and mud tracked on existing roadways shall be removed promptly.

Prior to overlaying existing asphalt, the County may require nondestructive testing to determine the amount of overlay necessary to bring the road to current subdivision road standards. The method of nondestructive testing and the data obtained must be in a form acceptable to the County. All "pot-holes", utility trench settlement, cracking, and any similar imperfections shall be repaired to the County's satisfaction prior to overlaying. The following should serve as a guideline for the rehabilitation and repairing of existing asphalt roads in Maury County:

(i) General - The Contractor is to provide the necessary labor, materials and equipment to restore and maintain the various road and driveway surfaces of all types, pavement and driveway bases, curbs, curbs and gutters, and sidewalks disturbed, damaged, or demolished during the performance of the work.

(ii) Permits - Before starting any work, secure the necessary permits to work within the County or State ROW and easements when surface materials will be disturbed or

demolished.

(iii) Materials - The quality of materials used in the restoration of existing roads, parking areas and driveways shall produce a finish surface equal to or better than the condition before work began. Compacted crushed stone backfill shall be in conformance with the TDOT Standard Specifications for Road and Bridge Construction.

Asphalt for a temporary patch shall be Bituminous Plant Mix Surface Course (Cold Mix) as specified in the TDOT Standard Specifications for Road and Bridge Construction.

(iv) Execution - Where trenches have been opened in any roadway or road that is a part of the State of Tennessee highway system, restore surfaces in accordance with the requirements of TDOT. All other restorations shall be done to the satisfaction of the County and per the Standard Details.

Concrete curbs and/or curbs and gutters shall be restored as required to match existing construction. Replace damaged sections with complete new sections or squares; patching of damaged sections will not be permitted.

When a manhole or valve box frame and cover, or other utility casting, requires adjustment to an elevation one inch or more above the existing pavement grade and is exposed to traffic before final paving is completed, a temporary ramp shall be constructed by feathering a cold mix for 360 degrees around the casting. A taper slope of not less than two feet per one inch shall be used. During the final paving operation the temporary ramp shall be removed from around the casting to allow for the permanent paving installation.

5.4 – Pavement Structure Components

5.4.1 - Subbase

The subbase consists of the layer(s) of specified or selected material of designed thickness placed on a subgrade to support a base course, surface course, or both.

5.4.2 – Subgrade Crown

The subgrade and each subsequent step in roadway paving construction shall have the crown constructed per the standard details. The County can require the Developer to provide field run surveyed cross sections to confirm the crown at subgrade or subsequent paving steps prior to proceeding to the next step.

5.5 – Installation

The mineral aggregate base shall be constructed in one or more layers with the compacted thickness being that as shown on the approved plans or the construction standards. Prior to the spreading of any mineral aggregate, the subgrade shall be proof rolled with a fully loaded tandem dump truck (or other approved equipment). Any areas which pump will require undercutting, backfill and compaction to specified limits. Additional proof rolling shall be required for all repaired areas.
Hauling over material already placed will not be permitted until it has been spread, shaped and compacted to the required density.

The base shall be constructed in two or more layers of approximate equal thickness. For total base thickness of 8”, lifts shall be placed and compacted in 4” thicknesses. For 10” base thickness, lifts shall not exceed 5”.

Except where mechanical aggregate spreading equipment is used to place the mineral aggregate base material, final shaping of each layer prior to compaction shall be accomplished by motor grader. In the event that mechanical spreading equipment fails to shape the base material properly, final shaping shall be done by motor grader or other approved means.

Immediately following spreading, the mineral aggregate base material shall be shaped to the required degree of uniformity and smoothness and compacted to the required density prior to any appreciable evaporation of surface moisture. Compaction of each layer shall be continuous until the minimum density requirement is achieved. Compacting equipment shall be smooth drum steel wheel vibratory rollers.

The thickness of the completed mineral aggregate base shall be in reasonably close conformity to the thickness shown on the approved plans or as called for by the construction standards. The thickness shall be measured at such frequency as established by the County by means of test holes or other approved methods. This shall be in addition to proof-rolling to be accomplished with the County during construction

Any testing shall be at no cost to the County.

The surface of the finished mineral aggregate base shall be in reasonably close conformity to the lines, grades and cross-sections as shown on the approved plans or construction standards and shall have a satisfactorily smooth riding quality.

Upon completion of the mineral aggregate base, it shall be maintained, under traffic if required, smooth and uniform until covered by the next stage of construction.

The mineral aggregate base, prepared as outlined herein, shall be sprinkled lightly with water to settle any loose dust. The bituminous prime coat shall then be applied uniformly over the surface of the base by the use of an approved bituminous distributor. The prime coat shall be applied at the rate of three-tenths (0.3) gallon per square yard and shall be maintained at an application temperature between 60 and 140 degrees Fahrenheit (F). Any areas containing an excess or deficiency of priming material shall be corrected by the addition of blotter material or bituminous material, as directed by the County.

The Contractor shall protect all structures and concrete surfaces from the bituminous material during construction. If after the bituminous prime coat has been applied, it fails to penetrate before traffic has to be turned back on the road, or paving is interrupted overnight, a dry cover material shall be spread at a rate of ten (10) pounds per square yard to prevent damage to the primed surface. An excess of cover material shall be avoided. The cover material shall be applied with suitable spreading devices to prevent the tires of the trucks from running over the fresh bituminous prime coat.

The Contractor shall maintain the prime coat and the surface intact until it has been covered by the next stage of construction. No succeeding stage of construction shall be placed upon the prime coat until it has properly cured.

The asphaltic concrete base course or surface course; bituminous plant mix (Hot Mix); may be placed on properly constructed and accepted subgrade or previously applied layers

provided the following conditions are met:

1. The subgrade or the surface upon which the hot mix is to be placed shall be free of excessive moisture.

2. The Hot Mix shall be placed in accordance with the temperature limitations listed in TDOT Specifications and only when weather conditions otherwise permit the pavement to be properly placed, compacted and finished.

5.6 – Testing

5.9.1 - Inspection and Acceptance

If requested by the County, for pavement installations and repairs the Contractor will then submit material testing certifications to the County. Materials are to meet the requirements found in the TDOT Standard Specifications for Road and Bridge Construction. The following should be considered for the submittal:

1) Asphalt mix design certifications

2) Compaction: Density results shall be compliant with the TDOT Standard Specification Section 407 and field verified. The percent voids in the total mix and the theoretical gravity of the mix should be documented as a bare minimum.

3) The County reserves to right to request any additional tests deemed necessary for acceptance.

6. Structures

6.1 Overview

This Section includes all fabricated, installed and erected structures and appurtenances related to road construction including pipes, culverts, headwalls, box culverts, box and slab bridges and retaining walls.

6.2 Reference Specifications

Unless modified by these specifications, all structure materials and construction requirements shall conform to the “Standard Specifications for Road and Bridge Construction” published by the Tennessee Department of Transportation (TDOT) (latest edition).

6.3 Pipe Culverts and Storm Sewers

All pipe culverts, side drains and storm sewers shall be furnished and installed in accordance with Section 204 and Section 607 of the TDOT Standard Specifications and the TDOT Standard Drawings.

Within the Public Right-of-Way
Culverts (pipe) that will be within the road right-of-way shall be reinforced concrete pipe (RCP) as per ASTM C76 with a minimum inside diameter of 18 inches. This shall apply for drains under driveways also.

Outside the Public Right-of-Way
Pipe manufactured from corrugated metal pipe may only be used outside of the road right-of-way. Plastic and metal pipe may enter the back side of a road drainage structure provided it extends away from the road right-of-way and not under the road pavement.

6.3.1 Concrete Pipe
Concrete Pipe shall be reinforced rigid pipe Class III ASTM C76 and shall be round, oval or flat based as shown on the approved plans

6.3.2 Corrugated Metal Pipe
Corrugated metal pipe shall be zinc-coated galvanized iron or steel pipe conforming to ASTM A929 and ASTM A760.

6.3.3 Pipe Bedding
Pipe bedding shall be granular stone, requiring a minimum of 6 inches of granular stone below the pipe to fit the lower part of the pipe exterior for at least 10 percent of its overall height. Pipe shall be properly backfilled.

6.3.4 Pipe sizes
Normal pipe sizes readily available from suppliers may be used to satisfy drainage requirements. Minimum pipe size for side drains and storm sewers shall be 18 inch diameter.

6.3.5 Pipe Cover

Pipes located within the roadway shall be designed to provide a minimum of 1-foot of cover over the pipe based upon the sub-grade elevations. Additional cover depth over the pipe will be required based upon:

(a) If the TDOT Standard Drawings require more than 1-foot of cover for the pipe type to be installed

(b) If the manufacturer's requirements require more cover then the design and installation shall be in accordance with those additional cover requirements.

6.4 Pipe Culvert Headwalls

Pipe culvert headwall treatments may be precast or cast-in-place concrete and are required for all pipe locations within the road right-of-way or outside of the right-of-way.

6.5 Storm Drainage Structures

Storm drainage structures consist of junction boxes, drop inlets, catch basins and manholes which may be constructed as precast concrete sections or cast-in-place concrete.
Inlet and outlet pipes shall extend through the walls of structures a sufficient distance to make connections, but shall be cut flush with the inside surfaces of the box structure.

All structures shall have a minimum 8 inches of stone bedding. The stone bedding shall be placed 1-foot beyond each side of the structure.

6.6 Road Curbs and Gutters

County Standard Details for curbs and curb & gutters are shown in the standard drawings section of these regulations.

7. TRAFFIC SIGNS AND MARKINGS

This chapter describes general traffic signing and striping design requirements for use on roads in Maury County. All design, installation and operation of signing and striping shall be in conformance with this section and the latest revision of the MUTCD.

7.1 Signing-General
The County will make the final determination regarding the type and location of signing controls within the right-of-way. These controls shall include traffic control signs (regulatory and warning), road name signs, delineators, and permanent barricades.

7.2 Design, Installation, and Maintenance
Because the County will maintain the permanent traffic control devices on public rights-of-way, all traffic control devices shall be fabricated and installed in accordance with this chapter and the latest revision of the Manual of Uniform Traffic Control devices (MUTCD).

7.3 Sight Visibility Standards for Traffic Control Signs
These standards are to provide for placement and configuration of County roads such that adequate sight distance is provided for traffic control signs.

7.4 New Road Signing
Permanent signing, unless otherwise approved by the County, shall be completely in place before any new road is opened to the public.

7.5 Other Standards
These Standards are to be used in conjunction with other applicable County requirements & regulations. The County may allow the installation of decorative posts and sign frames. In these cases the Developer, homeowners association or other responsible entity shall be responsible for the maintenance of these special installations. Decorative traffic supports shall be the color as required by the County.

7.6 Sign Posts, Supports, and Mountings
Sign posts and their foundations and sign mountings shall be constructed to hold signs in a proper and permanent position, to resist swaying in the wind or displacement by vandalism.

7.7 Sign Reflectivity
All traffic control signs must be fabricated with reflective materials. All reflective materials must qualify as High Intensity Grade for all signs except those signs for schools & pedestrians. For these signs, Diamond Grade sheeting shall be used. All signs or traffic control devices must have a minimum 7-year materials warranty.

7.8 Sign Blanks
Aluminum blanks of .080 gauges are standard, except for signs larger than 36 x 36 inches, which shall be .100 or .125 gauge aluminum.

7.9 - Pavement Marking and Striping - General

7.9.1 Type and Location of Striping and Markings

The County shall make the final determination in regards to the type and location of pavement striping and marking within the right-of-way.

7.9.2 Design, Installation, and Maintenance

The County maintains the permanent pavement striping and marking on public rights-of-way after completion of the warranty period. All such devices shall be specified and installed in accordance with these Standards; all designs shall be in accordance with these Standards and the latest revision of the MUTCD and TDOT Specifications.

7.9.3 New Road

Permanent striping and marking, unless otherwise approved by the County, shall be completely in place before any new road is opened to the public. For roads opened to traffic prior to final surfacing and striping, temporary painted traffic markings shall be installed to permanent standards. New striping on new roads, overlays, and chip seals, etc. will require thermoplastic installations.

7.10 - Pavement Markings (Symbols, Arrows, Word Markings)

7.10.1 General

The County may allow preformed thermoplastic on all pavement markings such as arrows, word markings, crosswalks, railroad crossings, school crossings, stop bars, and bike symbols.

7.10.2 Preformed Thermoplastic Specifications

The prefabricated markings described shall be 90 or 125 mils in thickness and consist of white or yellow pigmented plastic film with imbedded reflective glass spheres, uniformly distributed throughout their entire cross-sectional area. It shall be possible to affix the markings to bituminous or Portland cement concrete pavements by either a pressure sensitive precoated adhesive or a liquid contact cement. Prefabricated legends and symbols shall conform to the applicable shapes and sizes as outlined in the MUTCD.

7.10.4 Stop Bars

All stop bars shall be white and a minimum of 24 inches wide. Stop bars shall be used at all signalized locations, selected stop sign locations, and other locations specified by the County.

7.11 - Pavement Striping

All permanent striping shall conform to “Standard Specifications for Road and Bridge Construction,” published by TDOT, the latest revision except as herein amended.

7.11.1 General

(1) Typical striping widths for lane lines are 4 inches, unless otherwise noted. Double yellow centerline must have a 4-inch minimum gap between stripes according to MUTCD.

(2) Pavement. Epoxy paint shall be used for concrete pavement striping and thermoplastic shall be used for asphalt pavement striping.

(3) Layout. All striping on sealcoats shall require a layout line. Prior to striping, tabs are required for sealcoats (prior to the sealcoat process). All other conditions require spot taping.

7.11.2 Broken Line
All broken lines shall be created with 4-inch wide white paint (min.).

7.11.3 Centerline
All centerline striping shall be double yellow, each 4 inches wide, with a 4-inch minimum gap between the two.

7.11.4 Parking Stalls
All striping for parking shall be white and 4 inches wide. All edge lines of parking areas shall also be white and a minimum of 4 inches wide.

7.11.5 Lane Line Extensions Through Intersections
These markings extend longitudinal lane lines to indicate turning paths through an intersection, whether single or double turn lanes. These 8 inch wide doted lines are 2 feet long with 4 foot gaps.

7.12 - Temporary Striping

All temporary striping shall conform to “Standard Specifications for Road and Bridge Construction,” published by TDOT, the latest revision except as herein amended. Temporary striping shall be required prior to the opening of a road for travel where pavement and/or permanent striping cannot be completed due to weather and/or time constraints. Temporary striping must be coordinated and approved by the County prior to placement.

7.12.1 Specifications
Temporary striping shall be the same color and width as for permanent striping. Temporary striping shall consist of temporary striping or thermoplastic (no pavement marking “tabs” or temporary tape is allowed), depending on the pavement surface, spaced at 25-foot intervals.

7.12.2 Time Duration Limit
Temporary striping is permitted on Collectors for no more than 30 days. Temporary striping is permitted on Arterials for no more than 15 days.

7.12.3 Extensions
Extensions must be requested in writing if weather does not allow installation of permanent striping. The County will review and approve these requests.

8. DRAINAGE DESIGN

8.1 - Overview

As it relates to roadways, the objective of surface drainage is to remove storm water from the traveled roadway as rapidly as possible so that traffic may move safely and efficiently. This is accomplished through careful engineering practices such as using proper cross slopes, longitudinal grades, and cross drainage structures.

In the case of private development and/or subdivision design, the planning and design of the overall drainage system should be done simultaneously with the road or road layout and gradient planning and design. Where positive lot drainage is proposed, coordination of the road or road grades and the finished lot elevations must be achieved.

8.2 – Requirements

Supporting calculations are required to be provided with the plan submittal.

8.2.1 – Stormwater Management

Stormwater management systems shall be designed to accomplish the following:

1. Account for both offsite and onsite stormwater.
2. Maintain natural topographic and watershed divides.
3. Convey stormwater to a stream, natural channel, or other existing facility in a manner that does not cause flooding or erosion.
4. Discharge stormwater into the natural channel by connecting the channel at natural elevations, or by discharging the stormwater into an existing facility of sufficient capacity.

Determination of the size and capacity of an adequate stormwater management system shall take into account the future development in the watershed or affected portions thereof.

8.2.2 – Minimum Standard Design Frequencies

Minor System:
Minor Stormwater Management System (Minor System) is defined as the drainage system that is frequently used for collecting, transporting, and disposing of snowmelt, miscellaneous minor flows, and storm runoff up to the capacity of the system. The capacity should be equal to the maximum rate of runoff to be expected from the initial design storm, which has statistical frequency of occurrence of once in ten years. The minor system is sometimes termed the "convenience system," "initial system," or the "storm sewer system", and may include features ranging from curbs

and gutters to storm sewer pipes and open drainage ways.

The design of the minor stormwater management system shall be based on a storm frequency of 10 years (24-hour storm). This criterion shall be applied to both closed conduit and open channel systems. However, if the 10-year design flow for an open channel system is greater than 100 cubic feet per second (cfs), then the open or closed system shall be capable of passing the 100-year design flow within the drainage easement.

Systems relying on sinkholes or drainage wells for discharge shall be capable of passing the 100-year design flow within the drainage easement, assuming plugged conditions (0 cfs drawdown) for the sinkhole.

Major System:
Major Stormwater Management System (Major System) is defined as the drainage system that carries the runoff from a 100-year frequency storm. Although damage may occur, runoff will be carried by the major system whether or not it has been planned and designed, and whether or not improvements are situated wisely in respect to it. The major system usually includes features such as streets, and major stormwater management channels. Storm sewer systems may reduce the flow in many parts of the major system by storing and transporting water underground. Good planning and designing of a major system should eliminate major damage and loss of life from storms having a one percent chance of occurring in any given year.

Wherever possible, natural waterways serving the major system should remain undisturbed, with proposed development designed to maintain theses areas. Detention should be provided to avoid discharges that exceed the capacity of natural waterways. Channelization and other related modifications to the natural waterways are discouraged. Improvements to natural open channels that are to function primarily as the major system shall be designed to pass the 100-year design flow without damage to the channel. Man-made channels designed to function as the major system shall be capable of carrying a 100-year design flow. Where man-made channels are necessary, the channels should be located as far away from buildings or structures as possible.

The development shall be designed such that no building will be flooded with a 100-year design flow even if the minor system capacity is exceeded. The 100-year frequency storm shall be used to compute runoff for the design of the onsite major stormwater management system. This system shall be designed for areas to be graded in such a manner or buildings located or constructed in such a manner that if the capacity of the minor system is exceeded, no building will be flooded. Critical areas to consider as potential areas for flooding are sumps, relatively flat areas, and areas where buildings are located below streets or parking lots.

8.2.3 – Drainage / Hydrology Calculations

Drainage/Hydrology Calculations are required as part of the Construction Plan submittal. These calculations are required to be sealed by a TN registered professional engineer.
Calculations and/or reports shall be bound and submitted in a neat and orderly

manner.
Calculations and/or reports should include the following as a minimum for submittal:

(1) An original or color copy of a USGS map with the project boundary drawn on the map. Scale 1-inch = 2000-ft.
(2) Overview maps and drainage maps with topography depicting the pre-development drainage areas and the post development drainage areas.
(3) Summaries of findings and conclusions shall be provided in both narrative format and a tabular format.
(4) Drainage area calculations to include area(s) in acres, runoff coefficients, a description of runoff calculation methods used including rainfall intensity, and runoff (Q) used in calculations, If required by the Building & Zoning Office.
(5) Energy Dissipation Design
(6) General photographs of the site and key drainage conveyance features and streams.
(7) Summary of 100-year event high water elevations if open channel flow is present, if required by the Building & Zoning Office, .
(8) Stormwater detention calculations with tabular summary of pre-development and the post development flows. The post-development flows shall be clearly itemized to show routed-flows and by-passed flows if any.
(9) Other information as requested by the Building & Zoning.

8.2.4 – Drainage Structures

The design life for buried drainage structures shall be a minimum of 100 years.

Drainage structures shall be designed for force effects resulting from horizontal and vertical earth pressure, pavement load, live load and vehicular dynamic load. Where buried drainage structures with inverts below the water table are used, water buoyancy loads should be taken into consideration as well. References to tables in product design manuals or calculations showing that structures meet loading force requirements should be included in supporting calculations which are to be submitted with construction plans.

Discharge from the road shall be handled by means of a catch basin/curb inlet; the number, size, and location to be determined by the in drainage calculations as approved by the County Building & Zoning Office.

Where water cannot be adequately discharged by surface drainage, storm sewers shall be required. Public roads are not to be used to collect and convey storm water runoff other than that which falls on a lot fronting that road. In addition, the road and drainage design shall be such that storm water runoff shall be limited to 1.0 cfs of flow across road intersections.
Culverts (pipe) that will be within the road right-of-way shall be reinforced concrete pipe (RCP) as per ASTM C76 with a minimum inside diameter of 18 inches.

The development shall be designed to provide a minimum of 1-ft of cover for structures based upon the sub-grade elevations. If the manufacturers requirements require more cover than the design shall be in accordance with those additional cover requirements.

8.2.5 – Drainage Inlets

Drainage inlets should be designed and located to limit the spread of water on the traveled way based upon a 10-yr storm event with 8-ft of spread from the curb face. Inlet grates shall also be designed to accommodate bicycle and pedestrian traffic. Catch basins/curb inlets at low points along the roads and at the end of cul-de-sacs are to be a minimum double inlet catch basins/curb inlets on each side of the road. In low points the adjustment in the curb line to facilitate a sump condition can be used.

8.3 – Ditch Sections

Erosion Prevention and Sediment Control is a significant issue during and after construction. The TDEC permitting process and the TDEC Tennessee Erosion & Sediment Control Manual serves as some the County's primary Stormwater guidelines. Adherence to these items is required at all times during the construction of ditch sections to ensure that slopes and channels will continue to function adequately.

8.4 – Temporary and Permanent Stabilization and Vegetation

The construction plans and the Stormwater Pollution Prevention Plan shall address temporary and permanent stabilization and vegetation requirements and specifications. Timeframes, notes and details shall be included as a minimum. The Developer and/or the Contractor are required to apply the initial applications, provide maintenance and repairs and to re-apply applications as many times as necessary to accomplish stabilization and vegetation to the satisfaction of the County.

8.5 – Detention / Retention Basins

Stormwater detention is required to protect downstream properties from flood increases due to upstream development. The design is required to control peak flow at the outlet of a site such that post-development peak flows are equal to or less than pre-development peak flows for each of the 2-year, 5-year, 10-year and 100-year design storms.

The release rate from any detention facility is to be designed to be equivalent to or less than that of the site prior to the proposed development for the 2-year 5-year, 10-year and 100-year design storms, with emergency overflow capable of handling at least the 100-year discharge.

Detention systems must be constructed during the first phase of developments to eliminate damage to adjacent properties during construction. In this regard, the detention systems shall be designed to function as temporary sediment traps and cleaned out to proper volumes before completion. If siltation has occurred, detention systems must be restored to their design dimensions after construction is complete.

A TN Registered Engineer must certified in writing to the Building and Zoning Office that the detention facilities are constructed in substantial accordance with the design documents. The Certification shall be based upon field-run survey data obtained at the completion of construction. Photographs and a copy of the as-built survey shall be provided with the certification.

8.6 – Best Management Practices (BMPs)

TDEC and other counties and municipalities have compiled a Best Management Practices for Stormwater Management. These resources are readily available, many of which can be directly accessed through various websites. Those BMP's are designed to assist Contractors, Developers, and various businesses and industries to comply with the guidelines set forth by the National Pollution Discharge Elimination System (NPDES) Phase II Rule. Those BMP's should serve as the major tool to insure that appropriate erosion prevention and sediment control (EPSC) installation, maintenance and repairs are followed during the design and construction of development, subdivision and road construction projects.

8.7 – Inspection and Observations

It is the Developer's responsibility to make sure that Developer's contractor or his representatives are familiar with the design and shall review the construction in sufficient detail to confirm that the construction is as specified. Inspection and observations by the Developer shall occur as frequently as necessary to assure that the construction conforms to the plans and specifications. Inspection and observations shall be by qualified technical personnel experienced in the inspection of similar facilities and projects.

As noted elsewhere in these standards, the Developer is responsible for any other fees and/or costs charged by the County or any utility or agency for permits and/or inspections and testing related to the project.

****

****

Standard detail drawings for use in construction of facilities within subdivisions within Maury County follow hereinafter.

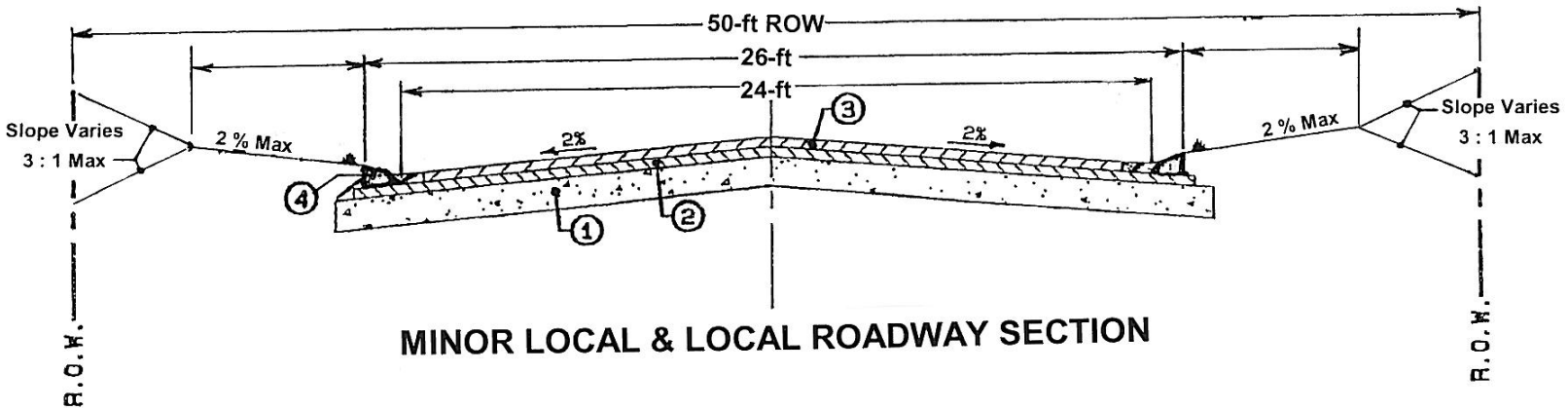

MINOR LOCAL & LOCAL ROADWAY SECTION

1. 8" Stone (Grading D Pug Mill Mix)
2. 2" Aphaltic Concrete Base (B-M2)
   Prime Coat (RS-2)
3. 1.5" Aphaltic Concrete Surface (411E)
   Tack Coat (SS-1)
4. Mountable Curb

Note
Construction shall conform to the Maury County Regional Planning Subdivision Regulations that include the Roadway and Drainage Technical Standards, latest revisions.

MINOR LOCAL & LOCAL ROADWAY SECTION

1

4/6/2009

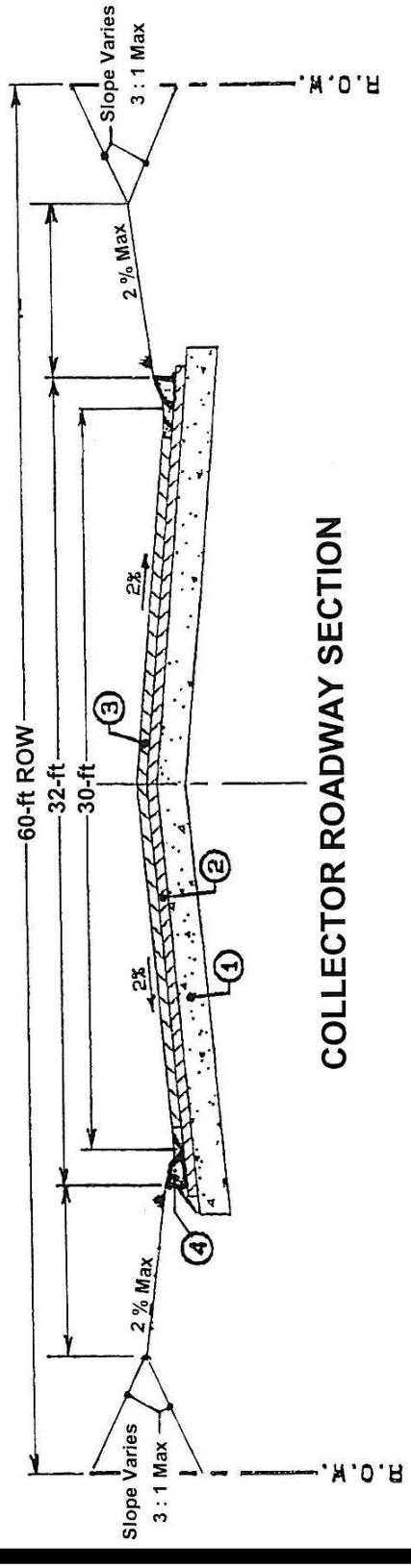

COLLECTOR ROADWAY SECTION

1. 10" Stone (Grading D Pug Mill Mix)
2. 2" Aphaltic Concrete Base (B-M2)
   Prime Coat (RS-2)
3. 1.5" Aphaltic Concrete Surface (411E)
   Tack Coat (SS-1)
4. Mountable Curb

Note
Construction shall conform to the Maury County Regional Planning Subdivision Regulations that include the Roadway and Drainage Technical Standards, latest revisions.

MAURY COUNTY 1807 TENNESSEE

COLLECTOR ROADWAY SECTION

2

4/6/2009

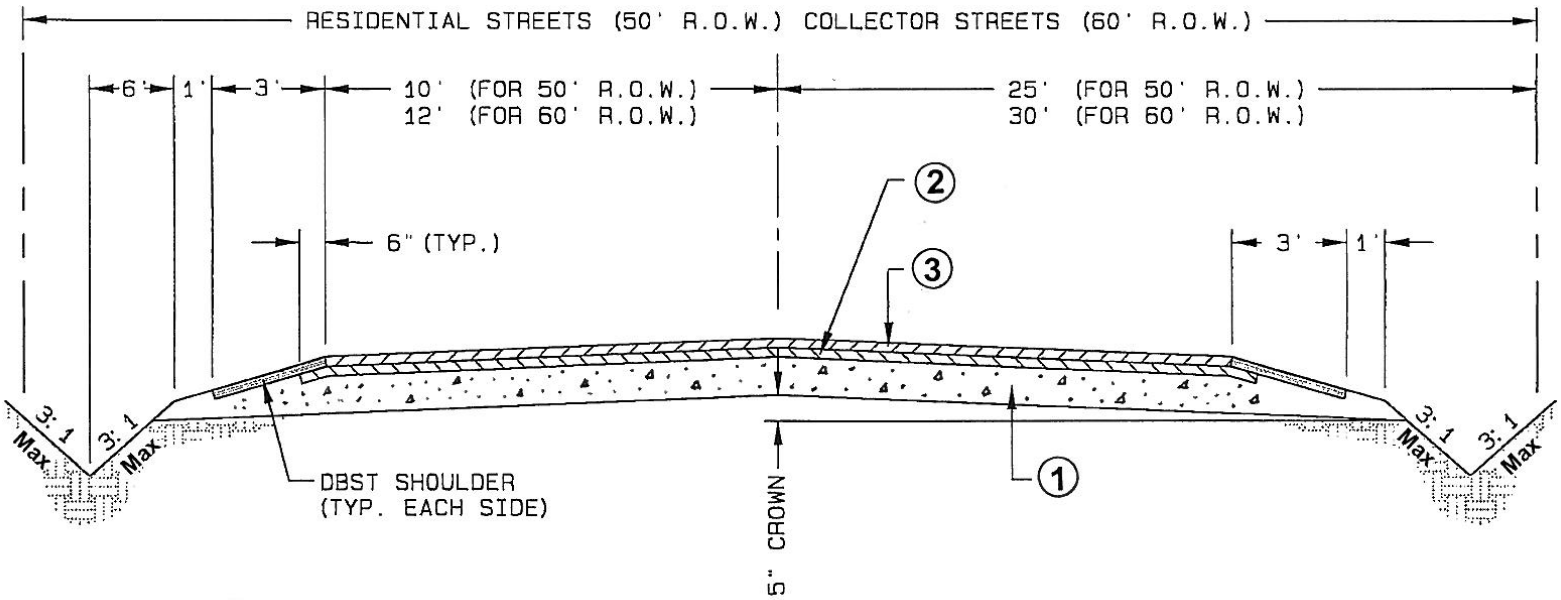

1. 8" Stone (Grading D Pug Mill Mix)
2. 2" Aphaltic Concrete Base (B-M2)
   Prime Coat (RS-2)
3. 1.5" Aphaltic Concrete Surface (411E)
   Tack Coat (SS-1)

Note
Construction shall conform to the Maury County Regional Planning Subdivision Regulations that include the Roadway and Drainage Technical Standards, latest revisions.

DITCH ROADWAY SECTION
(Where Approved)

DITCH ROADWAY SECTION
(Where Approved)

3

4/6/2009

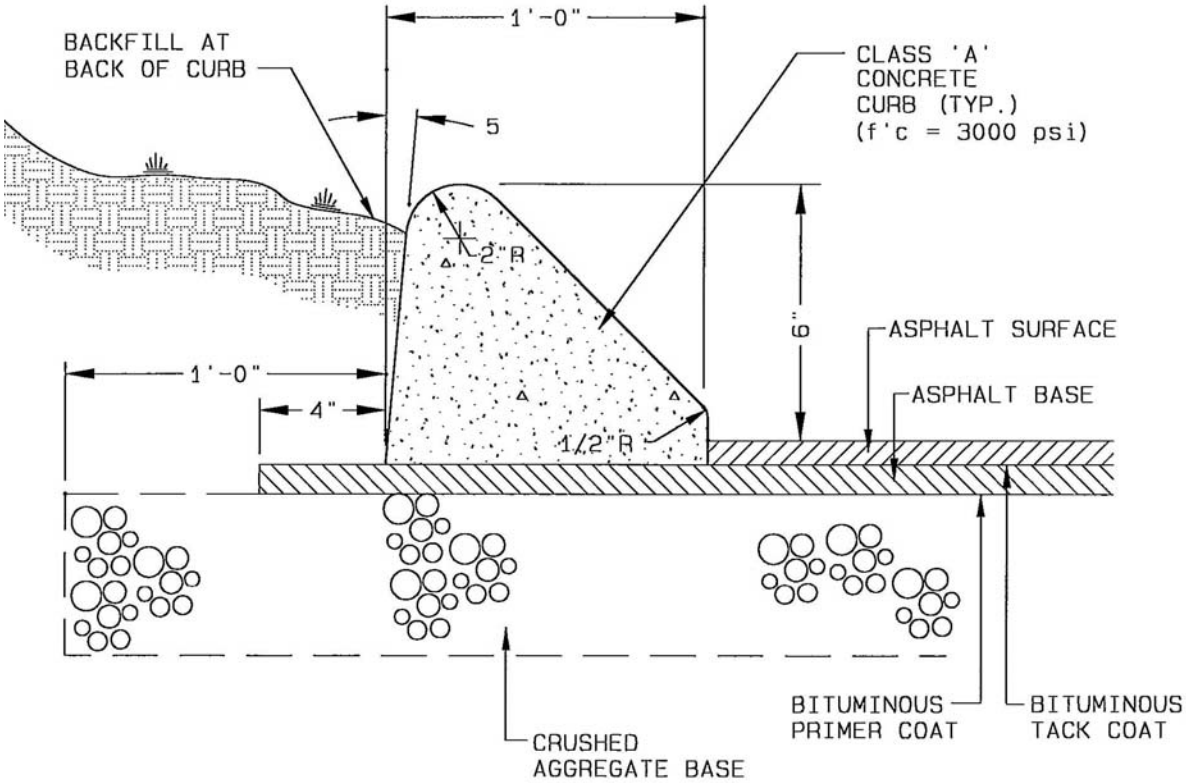

NOTE:
INSTALL 1/2" EXPANSION JOINT
AT 20'-30' ON STRAIGHT RUNS
EQUALLY SPACED AND AT
CURVE RETURNS.

MOUNTABLE CONCRETE CURB

4

4/6/2009

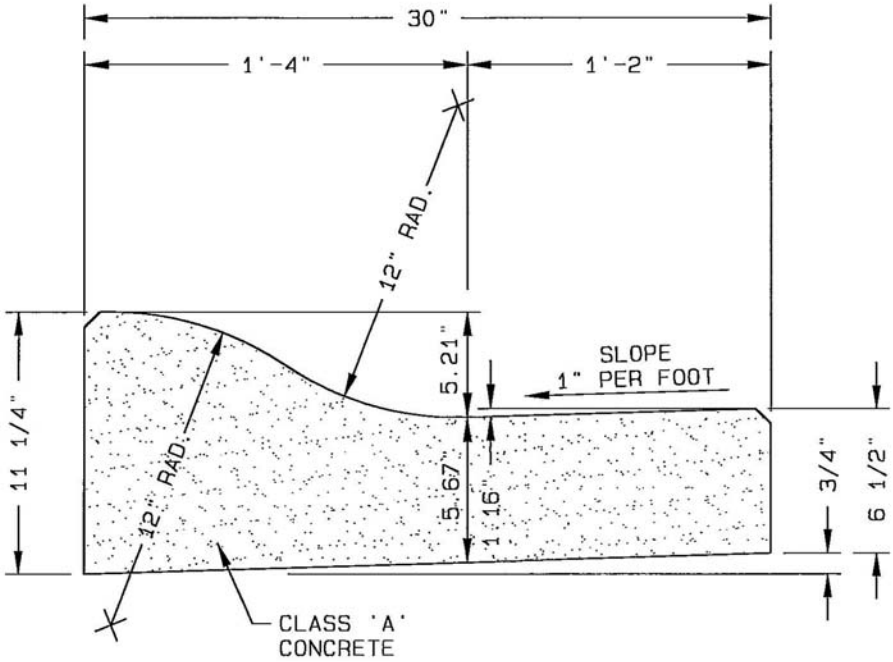

NOTES:

1. EXPANSION JOINTS TO BE SPACED A MAXIMUM OF 100' APART OR AS DIRECTED BY THE ENGINEER.
2. EXPANSION JOINTS WILL ALSO BE REQUIRED AT TANGENT POINTS, DRIVE RAMPS AND INLETS.
3. CONSTRUCTION JOINTS ARE TO BE CUT INTO CURB AND GUTTER EVERY 10' TO A DEPTH OF D/4.

MOUNTABLE CONCRETE CURB WITH GUTTER

5

4/6/2009

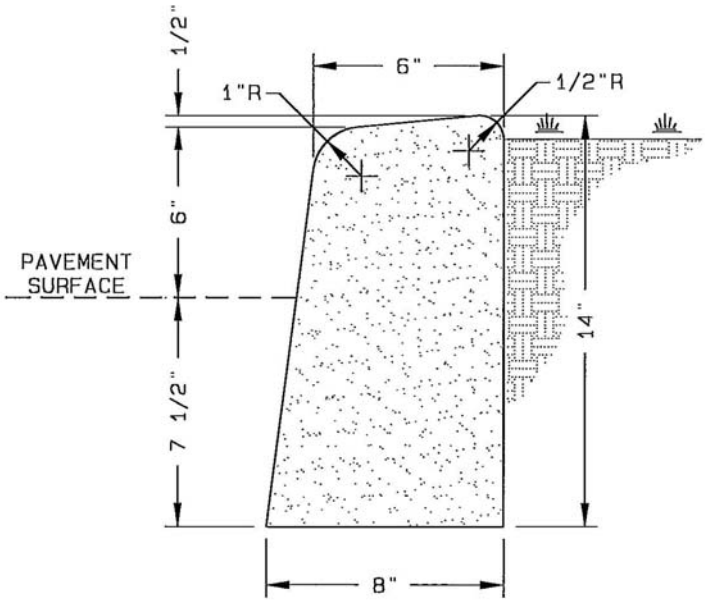

NOTES:

1. EXPANSION JOINTS TO BE SPACED A MAXIMUM OF 100' APART OR AS DIRECTED BY THE ENGINEER.
2. EXPANSION JOINTS WILL ALSO BE REQUIRED AT TANGENT POINTS, DRIVE RAMPS AND INLETS.
3. CONSTRUCTION JOINTS ARE TO BE CUT INTO CURB AND GUTTER EVERY 10' TO A DEPTH OF D/4.

STANDARD CONCRETE CURB

6

4/6/2009

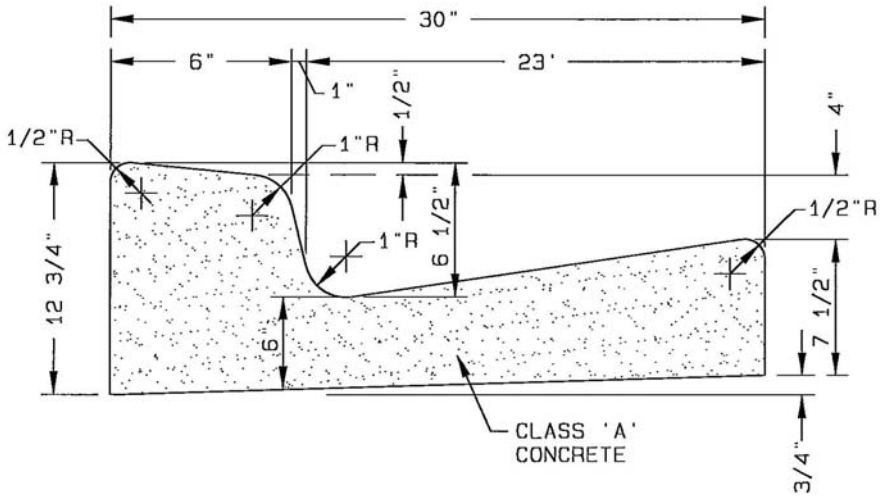

NOTES:

1. EXPANSION JOINTS TO BE SPACED A MAXIMUM OF 100' APART OR AS DIRECTED BY THE ENGINEER.
2. EXPANSION JOINTS WILL ALSO BE REQUIRED AT TANGENT POINTS, DRIVE RAMPS AND INLETS.
3. CONSTRUCTION JOINTS ARE TO BE CUT INTO CURB AND GUTTER EVERY 10' TO A DEPTH OF D/4.

STANDARD CONCRETE CURB WITH GUTTER

7

4/6/2009

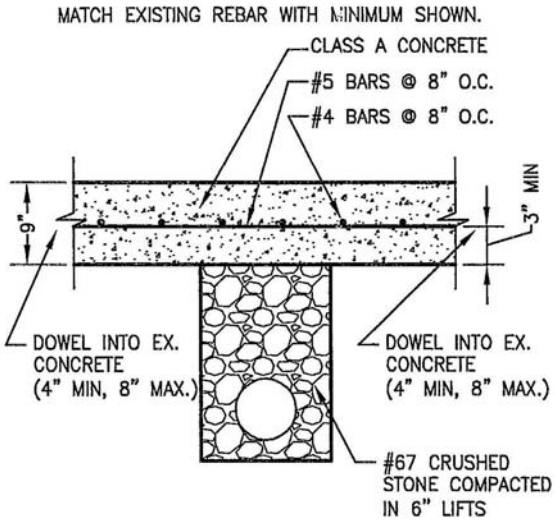

CONCRETE PAVEMENT

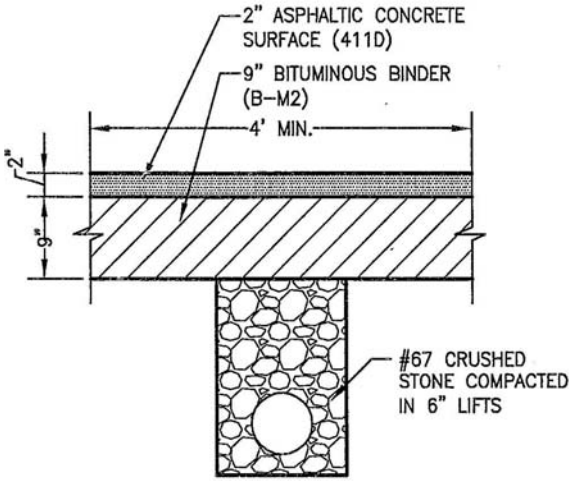

ASPHALTIC SURFACE

(CROSSING CUTS)

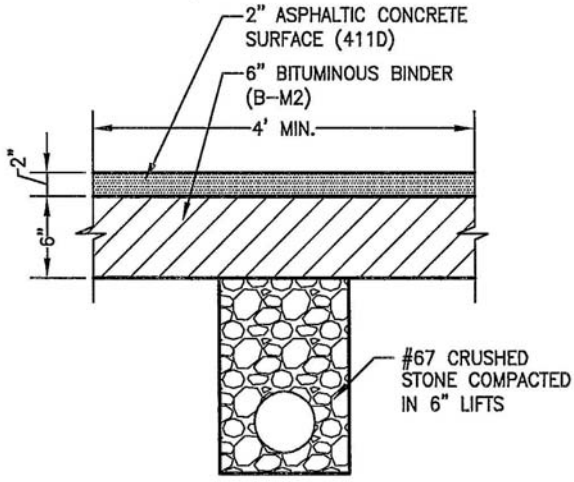

ASPHALTIC SURFACE

(PARALLEL CUTS)

GENERAL NOTES:

1. ALL WORK SHALL BE FIELD CHECKED AND APPROVED BY THE PUBLIC WORKS DEPARTMENT PRIOR TO ITS BEGINNING AND AFTER COMPLETION THEREOF.

2. INSPECTION PERSONNEL OF THE PUBLIC WORKS DEPARTMENT SHALL BE NOTIFIED AT LEAST TWO (2) DAYS PRIOR TO COMMENCING WORK.

3. ALL WORK PERFORMED SHALL BE WORKMANSHIP DEFECT FREE FOR A PERIOD OF ONE (1) YEAR AFTER COMPLETION.

4. ALL EXISTING PAVEMENT, BASE, CURB AND GUTTER, AND SIDEWALKS SHALL BE CUT AND BROUGHT TO A NEAT LINE BY USE OF AN AIR HAMMER, SAW OR OTHER SUITABLE EQUIPMENT. EXPANSION JOINTS REMOVED SHALL BE REPLACED.

5. THE MINIMUM WIDTH TO BE TRIMMED ON EACH SIDE OF THE TRENCH LINE, AS SEEN IN THE SECTION, MAY BE WAIVED OR AMENDED UPON APPROVAL OF THE DEPARTMENT INSPECTOR, HOWEVER, A MINIMUM WIDTH OF REPLACEMENT SHALL BE 4'-0" TO ALLOW FOR A ROLLER.

6. IF PERMANENT PAVEMENT REPAIRS CANNOT BE MADE WITHIN THREE (3) DAYS, THEN TEMPORARY PAVING SHALL BE MADE WITH A 2" COLD MIX OR HOT BITUMINOUS SEAL COAT OVER COMPACTED CRUSHED STONE.

7. ALL EXCAVATIONS MADE WITHIN THE PUBLIC RIGHT-OF-WAY REQUIRE EXCAVATION AND STREET CLOSURE PERMITS FORM THE PUBLIC WORKS DEPARTMENT PRIOR TO COMMENCING WORK.

8. FLOWABLE FILL SHALL MEET THE REQUIREMENTS OF THE TENNESSEE DEPARTMENT OF TRANSPORTATION'S STANDARD SPECIFICATION SECTION 204.

TRENCH REPAIR WITHIN ROADWAY

8

4/6/2009

GENERAL NOTES:

1. ALL WORK SHALL BE FIELD CHECKED AND APPROVED BY THE PUBLIC WORKS DEPARTMENT PRIOR TO ITS BEGINNING AND AFTER COMPLETION THEREOF.

2. INSPECTION PERSONNEL OF THE DEPARTMENT SHALL BE NOTIFIED AT LEAST TWO (2) DAYS PRIOR TO COMMENCING WORK.

3. ALL WORK PERFORMED SHALL BE WORKMANSHIP DEFECT FREE FOR A PERIOD OF ONE (1) YEAR AFTER COMPLETION.

4. ALL EXISTING PAVEMENT, BASE, CURB AND GUTTER, AND SIDEWALKS SHALL BE CUT AND BROUGHT TO A NEAT LINE BY USE OF AN AIR HAMMER, SAW OR OTHER SUITABLE EQUIPMENT. EXPANSION JOINTS REMOVED SHALL BE REPLACED.

5. THE MINIMUM WIDTH TO BE TRIMMED ON EACH SIDE OF THE TRENCH LINE, AS SEEN IN THE SECTION, MAY BE WAIVED OR AMENDED UPON APPROVAL OF THE DEPARTMENT INSPECTOR, HOWEVER, A MINIMUM WIDTH OF REPLACEMENT SHALL BE 4'–0" TO ALLOW FOR A ROLLER.

6. IF PERMANENT PAVEMENT REPAIRS CANNOT BE MADE WITHIN THREE (3) DAYS, THEN TEMPORARY PAVING SHALL BE MADE WITH A 2" COLD MIX OR HOT BITUMINOUS SEAL COAT OVER COMPACTED CRUSHED STONE.

7. ALL EXCAVATIONS MADE WITHIN THE PUBLIC RIGHT–OF–WAY REQUIRE EXCAVATION AND STREET CLOSURE PERMITS FORM THE PUBLIC WORKS DEPARTMENT PRIOR TO COMMENCING WORK.

8. FLOWABLE FILL SHALL MEET THE REQUIREMENTS OF THE TENNESSEE DEPARTMENT OF TRANSPORTATION'S STANDARD SPECIFICATION SECTION 204.

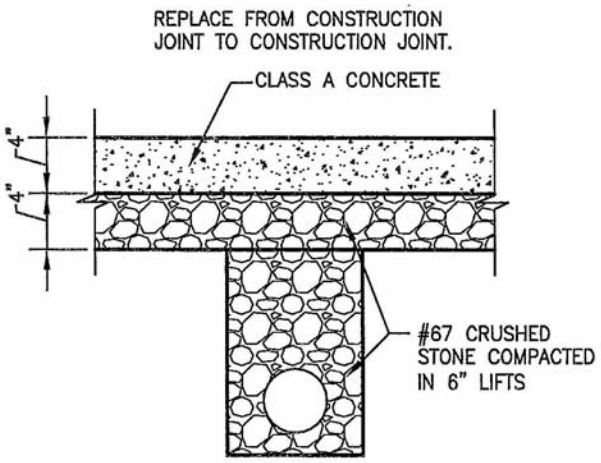

SIDEWALK REPLACEMENT

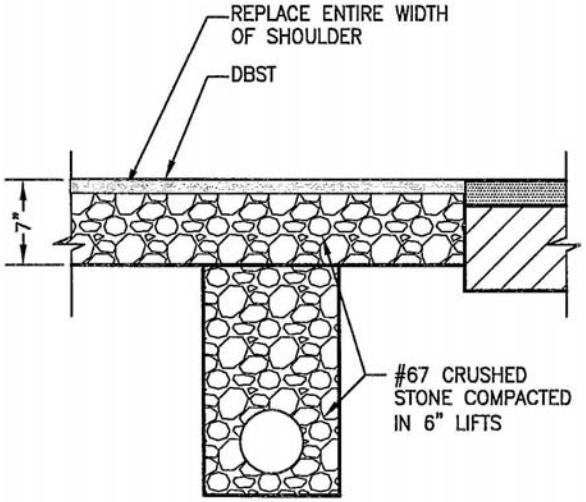

SHOULDER REPLACEMENT

TRENCH REPAIR WITHIN ROADWAY

4/6/2009

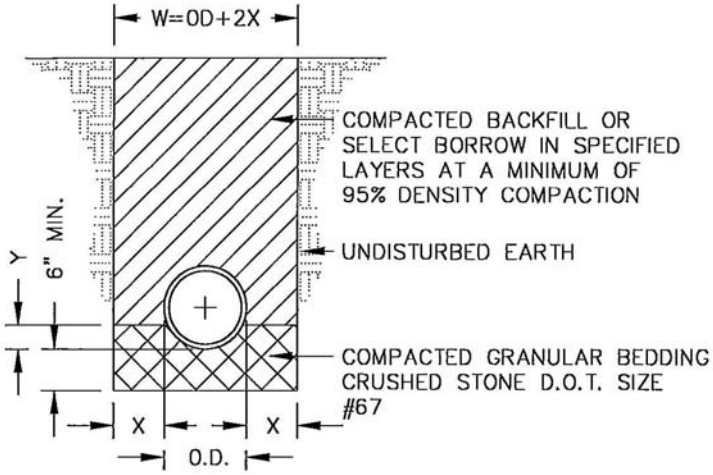

STANDARD TRENCH

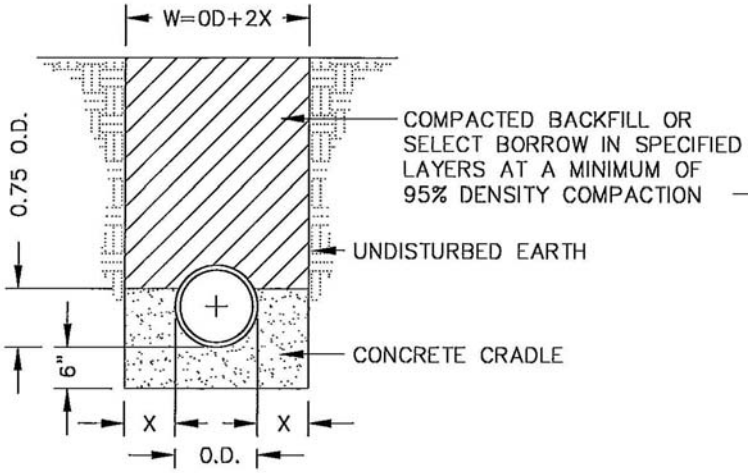

CONCRETE CRADLE

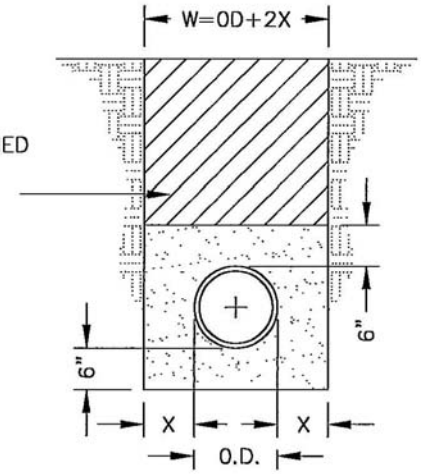

CONCRETE ENCASEMENT

NOTES:

1. CONCRETE FOR CRADLES AND ENCASEMENTS TO HAVE f'c = 3000 PSI @ 28 DAYS.
2. POUR CONCRETE AGAINST UNDISTURBED EARTH.
3. FOR CONTINUOUS CONDUIT IN TRENCH CONDITIONS, THE WIDTH OF TRENCH (W) SHALL BE O.D.+2X MAX.
4. THE WIDTH OF TRENCH FOR ALL OTHER PIPE DIAMETERS SHALL BE ACCORDING TO TABLE 'A' SHOWN HEREON.
5. BACKFILL MATERIAL IN EXISTING ROADWAYS SHALL BE CRUSHER RUN STONE COMPACTED IN 6" LAYERS UP TO THE BOTTOM OF THE PAVEMENT RESTORATION SECTION.

TABLE 'A'

LESS THAN 12"	**
12" – 30"	12"
33" – 42"	15"
48" & LARGER	18"

** – TRENCH WIDTH (W) SHALL BE 3'–0" MAX. – WIDTH OF TRENCH (W)=O.D.+2X WHERE X IS DISTANCE FROM OUTSIDE OF PIPE TO EDGE OF TRENCH.

MAURY COUNTY 1807 TENNESSEE

TRENCH BACKFILL SECTIONS

10

4/6/2009

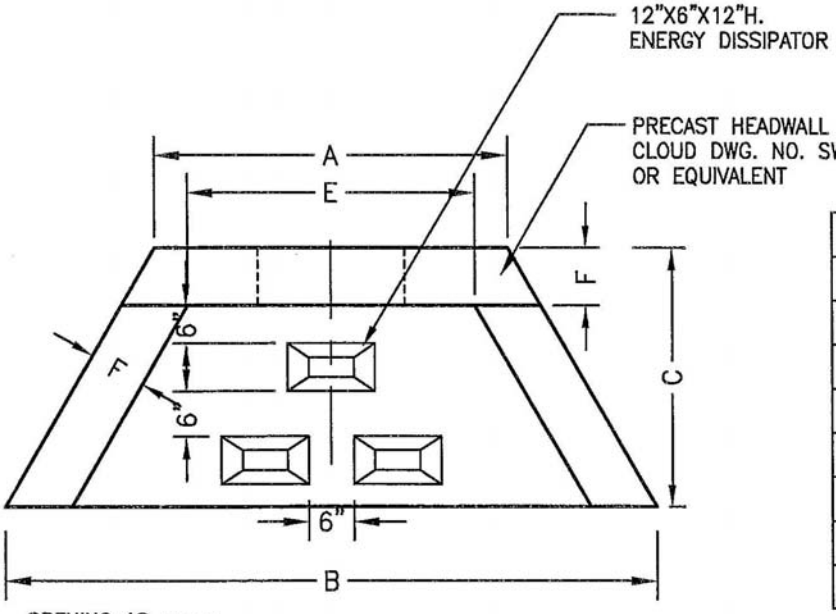

SIZE	4'	6'	8'	10'
A	32"	48"	72"	96"
B	48"	72"	96"	120"
C	30"	44"	50"	56"
D	25"	36"	52"	66"
E	24"	36"	59"	83"
F	5"	8"	8"	8"
MAX. OPG.	18"	26"	40"	60"
WT./#	1090	3130	5625	8575

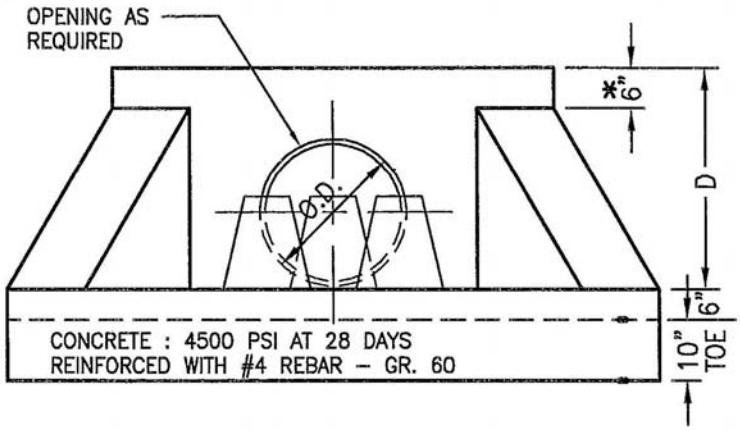

* 0" ON 4' WINGED HEADWALL
* 10' WW HAS MAX. D DIMENSION = 84"

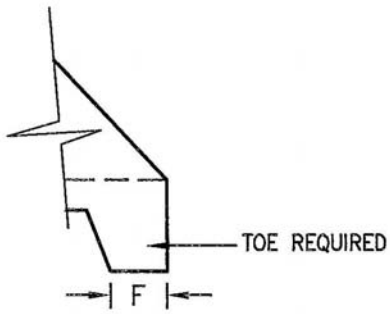

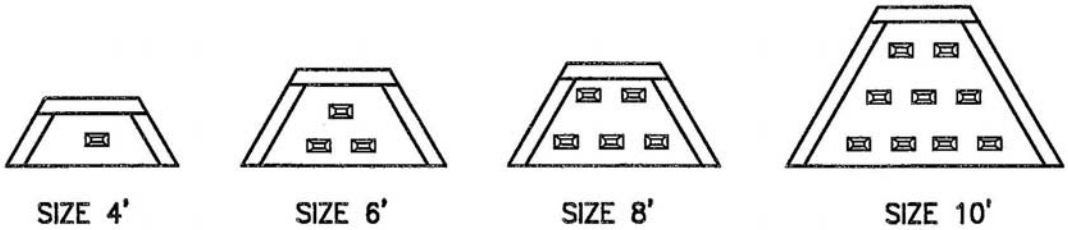

PRECAST CONCRETE HEADWALL W/ ENERGY DISSIPATORS

11

4/6/2009

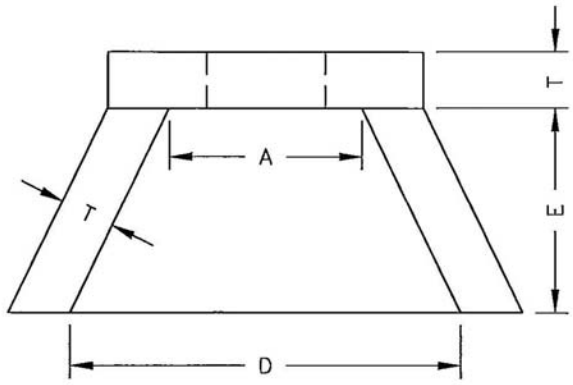

TOP VIEW

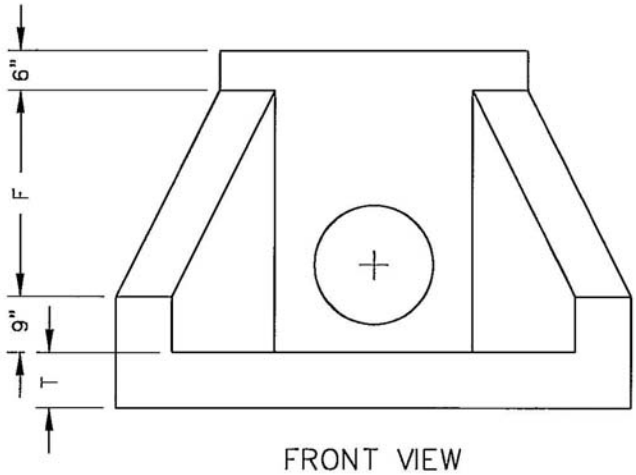

FRONT VIEW

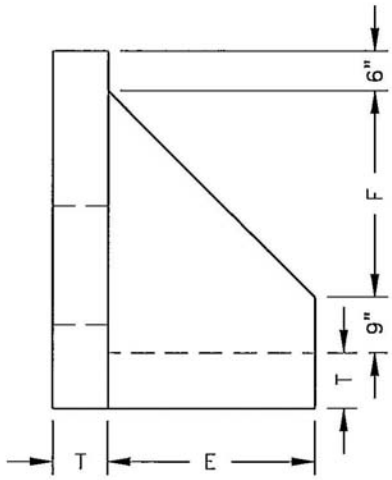

SIDE VIEW

TABLE OF DIMENSIONS					
SIZE	A	D	E	F	T(MIN)
15"	2'–6"	5'–0"	2'–6"	1'–9"	6"
18"	2'–6"	5'–0"	2'–6"	1'–9"	6"
21"	2'–6"	5'–0"	2'–6"	1'–9"	6"
24"	4'–0"	6'–6"	4'–0"	3'–3"	6"
30"	4'–0"	6'–6"	4'–0"	3'–3"	6"
36"	5'–6"	8'–0"	3'–6"	4'–5"	6"
42"	5'–6"	8'–0"	3'–6"	4'–5"	6"
48"	5'–6"	8'–0"	3'–6"	4'–5"	6"
54"	7'–0"	9'–5"	4'–6"	5'–9"	6"
60"	7'–0"	9'–5"	4'–6"	5'–9"	6"
66"	8'–6"	11'–0"	5'–6"	6'–11"	6"
72"	8'–6"	11'–0"	5'–6"	6'–11"	6"

NOTES:

1. CONCRETE SHALL BE 4000 PSI @ 28 DAYS REINFORCED WITH NO. 4 BARS @ 10" O.C. EACH WAY WITH WINGS AND TOE SLAB DOWELLED TO HEADWALL WITH NO. 5 BARS
2. 3/4" CHAMFER ON ALL EXPOSED EDGES.

PRECAST CONCRETE HEADWALL

12

4/6/2009

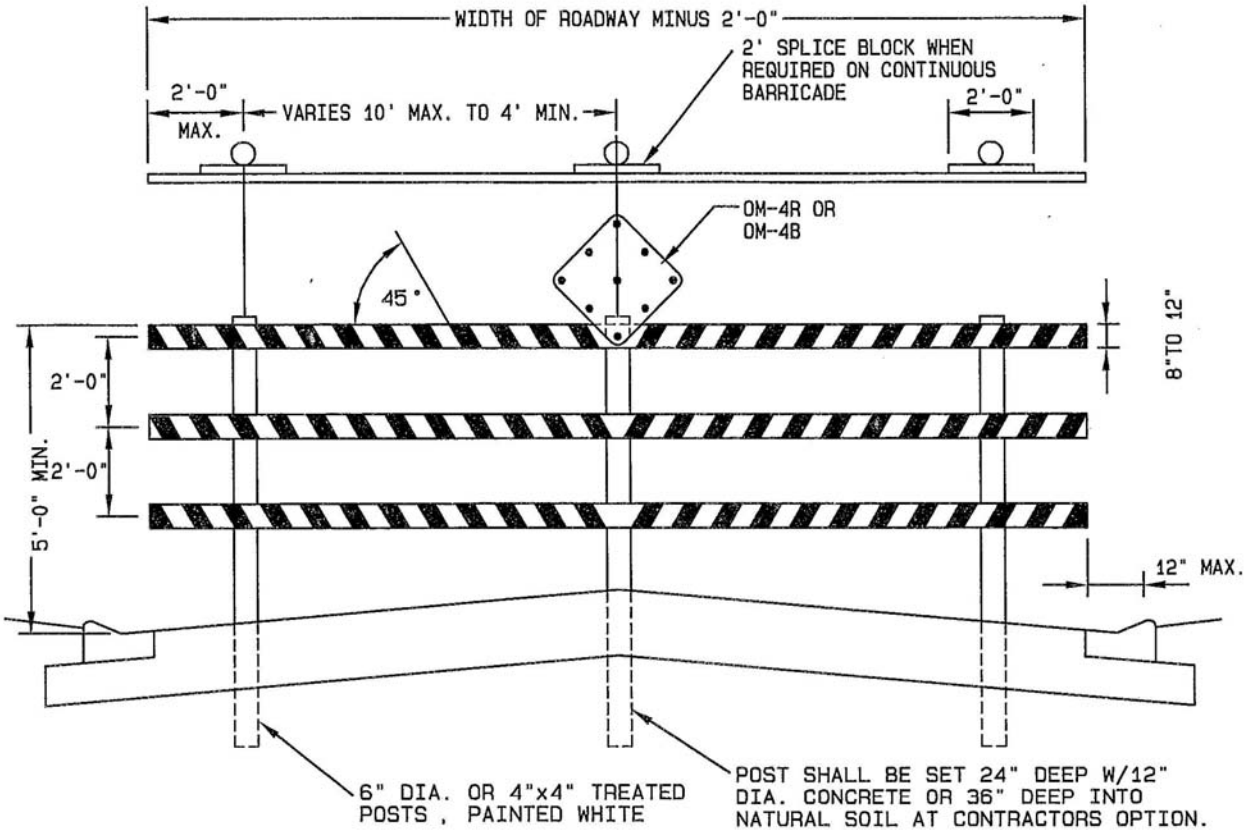

NOTES:

1. WIDTH OF RAIL SHALL BE A MINIMUM OF 8" AND MAY BE A MAXIMUM OF 12", 2" NOMINAL SMOOTH LUMBER.

2. RAILS SHALL BE FASTENED TO EACH POST WITH 1/4" STEEL BOLTS WITH WASHERS ON EACH SIDE. BOLT THREADS SHALL BE PEENED.

3. THE RAILS SHALL RECEIVE TWO COATS OF WHITE OIL BASED PAINT. THEN SHALL HAVE 6" WIDE REFLECTORIZED RED STRIPES OF TAPE PLACED ON 45° SLOPES DOWN AND TOWARD THE CENTER OF THE BARRICADE.

4. BARRICADES MAY BE CONSTRUCTED IN SECTIONS OR MAY BE CONTINUOUS ACROSS ROADWAY WIDTH. SPLICES ON CONTINUOUS RAIL BARRICADES SHALL BE AT POSTS AND SHALL HAVE A 2'-0" SPLICE BLOCK ON THE BACK SIDE OF THE SAME MATERIAL AS RAIL.

5. 18" DIAMOND REFLECTORIZED RED PANEL OR 18" DIAMOND RED OR BLACK PANEL WITH NINE 3" DIAMETER RED REFLECTORS SYMMETRICALLY PLACED AT CENTER POSTS, A MINIMUM OF 4'-0" ABOVE GROUND SHALL BE USED FOR END OF ROAD MARKERS.

BARRICADE DETAIL

13

4/6/2009

APPENDIX B

Performance/Maintenance Agreement

PERFORMANCE/MAINTENANCE AGREEMENT

KNOW ALL MEN BY THESE PRESENTS: That **_____**, a_____(insert type of entity – corporation, LLC, partnership, association) (hereinafter "Principal"), is indebted and firmly bound unto Maury County, Tennessee for the use and benefit of the Maury County Regional Planning Commission, and for the use and benefit of all future lot owners within that certain site known as **_____, Final Plat, Section _____,** in the penal sum of _____No/**100 DOLLARS ($_____.00)** good and lawful money of the United States of America, for securing the performance and future maintenance of certain improvements and works, as hereinafter set forth, and for the payment of which sum well and truly to be made the undersigned does hereby bind itself, its heirs, executors, personal representatives, administrators, successors and assigns, jointly and severally, firmly by these presents, and in support thereof represents, acknowledges and agrees as follows:

Recitals

1. That **_____,** is a _____ (insert type of entity), having a mailing address of _____, _____, Tennessee, _____ (zip).

2. The Principal has submitted a Final Plat of _____ Subdivision, Final Plat, Section ___, said Final Plat prepared by _____ (consultant and company), dated _____, 20___.

3. The approval of the Maury County Regional Planning Commission is a condition precedent to the right of the Principal to receive necessary construction permits.

4. The Maury County Regional Planning Commission will not approve the Final Plat of the subdivision for issuance of necessary permits and for registration until all grading, ditching, storm, streets/alleys, and street improvements, street lights, drainage culverts, storm water facilities and improvements, driveway culverts and headwalls, curbs, stabilization of all improvements, erosion and sedimentation control measures and methodologies, both permanent and temporary, and other improvements, the placing of concrete subdivision markers and installation of iron pins or stakes are completed and installed in accordance with the regulations and specifications of the Maury County Regional Planning Commission and the Maury County Highway Department and Highway Superintendent, and the conditions established by the Maury County Regional Planning Commission, or until a satisfactory Performance Agreement with sufficient surety is furnished.

5. It is the desire of the Principal to commence construction and installation of said improvements and desires to have said Final Plat of subdivision recorded in the Register's Office of Maury County, Tennessee, so as to provide for the orderly development and transfer of the property in said subdivision.

6. It is the desire of the Principal to have the Final Plat recorded, since the recording of the Final Plat is a prerequisite to the issuances of necessary building permits, so as to provide for the orderly development and transfer of property, and to have said permits issued prior to the actual completion of construction and installation of the roads, drainage and erosion control improvements.

7. The Maury County Regional Planning Commission has established that the estimated cost of completing all improvements to include: grading, ditching, storm, streets/alleys, and street improvements, street lights, drainage culverts, storm water facilities and improvements, driveway culverts and headwalls, curbs, stabilization of all improvements, erosion and sedimentation control measures and methodologies, both permanent and temporary, and other improvements, the placing of concrete subdivision markers and installation of iron pins & monuments (collectively known as): **ROADS, DRAINAGE AND EROSION CONTROL is _____ AND NO/100 ($_____.00).** The estimated cost is based upon no construction work has commenced.

8. Pursuant to the procedures followed by the Maury County Regional Planning Commission, it is permissible for the Principal to request, in lieu of the completion of said improvements and works but prior to the recording of the Final Plat, to execute an agreement with good and sufficient surety satisfactory to the Maury County Regional Planning Commission and Maury County, Tennessee in an amount equal to the estimated cost of completion, as listed in Section # 7, of the construction and installation of the required roads, drainage and erosion control improvements and works, providing and insuring that said improvements and works will be constructed.

9. To secure installation of the aforesaid improvements and works, and to induce the Maury County Regional Planning Commission and Maury County, Tennessee to allow the Final Plat to be recorded, since the recording of the Final Plat is a prerequisite to the issuances of necessary building permits, prior to completion of the required roads, drainage and erosion control improvements and works, Principal provides this Performance and Maintenance Agreement and an irrevocable letter of credit, issued by **_____ Bank, which is located and callable within the limits as established in the Subdivision Regulations,** the proceeds of which are payable to the Maury County Regional Planning Commission and/or Maury County, Tennessee in an amount equal to a total of **_____ and No/00 DOLLARS ($_____.00). Principal specifically acknowledges and accepts that should the supporting surety not be renewed or extended as approved by the Maury County Regional Planning Commission, or if the new surety is not in accordance with the requirements of this Agreement and the Subdivision Regulations, then the surety will be assumed in default and will be called in its full amount by the Secretary of the Maury County Regional Planning Commission or the Maury County Attorney or the Maury County Building & Zoning Office in accordance with the Subdivision Regulations.**

10. The Maury County Regional Planning Commission is willing to authorize the Final Plat to be recorded, since the recording of the Final Plat is a prerequisite to the issuances of necessary building permits, upon the execution of this agreement by the Principal and providing of the surety, understanding that this agreement is subject to the condition that the Principal will, in accordance with the timeframes for completion as established in the Subdivision Regulations, complete the construction of all required improvements and works, as herein set forth, and obtain their inspection, approval and acceptance by the Maury County Regional Planning Commission and Maury County, Tennessee. The Maury County Regional Planning Commission has the authority, pursuant to and in accordance with the Subdivision Regulations, to extend the Performance Agreement term and to convert the Performance obligation to a Maintenance obligation so long as the construction of the improvements are in accordance with the regulations, ordinances and approved plans and specifications.

NOW THEREFORE,

In the event said Principal shall fully comply with all the terms hereof, and shall construct, install and complete all of the required improvements and works, enumerated herein, and maintain said improvements as are shown on the approved Final Plat prepared by _____ (consultant), which Final Plat was reviewed and approved by the Maury County Regional Planning Commission, and as also stated herein, which installation, completion and maintenance shall be in accordance with the regulations and requirements of the Maury County Regional Planning Commission, and in accordance with all conditions established by the Maury County Regional Planning Commission as set forth in the minutes of its meetings, and do all of said work in a proper and workmanlike manner to the satisfaction of the Maury County, Tennessee and the Maury County Regional Planning Commission, then this Performance obligation may be converted by the Maury County Regional Planning Commission to a Maintenance obligation guaranteeing the improvements in the amount of not less than thirty (30%) of the actual construction cost as listed in Section # 7, for the period of time that is in accordance with the timeframes established in the Subdivision Regulations, and continuing until acceptance of the improvements by Maury County, Tennessee.

In the event that any of the required improvements and works are not performed or not completed in accordance with the timeframes for completion as established in the Subdivision Regulations, and are not performed or not completed in accordance with each of the aforesaid rules, regulations and requirements, then the entire penal sum of **$_____.00**, or so much thereof as is necessary to complete the improvements in question, shall be forfeited and paid to the Maury County Regional Planning Commission and Maury County, Tennessee by Principal and/or Surety as liquidated damages for such default. The Maury County Regional Planning Commission and/or Maury County, Tennessee shall then use said funds to pay for completion of the required improvements and works, refunding any unused portion of said funds.

In the event that any of the required improvements and works are not maintained for the period of time that is in accordance with the timeframes established in the Subdivision Regulations, after its conversion to a Maintenance obligation, or

such longer time as extended by the Maury County Regional Planning Commission, in the same condition in which they existed at the time of its conversion to a Maintenance obligation by the Maury County Regional Planning Commission, then the entire penal sum of **$_____.00** with respect to those improvements shall be forfeited and paid to the Maury County Regional Planning Commission or Maury County, Tennessee by Principal as liquidated damages for such default. The Maury County Regional Planning Commission or Maury County, Tennessee shall then use said funds to pay for completion of the required maintenance, refunding any unused portion of said funds.

Action by Maury County, Tennessee and/or the Maury County Regional Planning Commission through its legal counsel in calling on the letter of credit to pay **$_____.00**, or such lesser amount as is necessary, pursuant to the terms of this Performance/Maintenance Agreement shall not be deemed a release of Principal for any liability hereunder. The Principal acknowledges that it is liable for all obligations under this Performance/Maintenance Agreement.

Witness my hand this the _____ day of _____, 20____.

_____
A Tennessee _____

BY: _____

TITLE: _____

STATE OF _____)

COUNTY OF _____)

Personally appeared before me, _____, a Notary Public of said County and State, _____, with whom I am personally acquainted (or proved to me on the basis of satisfactory evidence), and who, upon oath, acknowledged (her)himself to be the _____ of **_____,** a Tennessee _____, and that (s)he as such _____, being authorized so to do, executed the foregoing instrument for the purposes contained therein.

Witness my hand and seal this the ____ day of _____, 20_____.

_____ My Commission Expires:_____

NOTARY PUBLIC